INSTRUCTION MANUAL

操作说明书

RUBBER POLISHING MACHINE
MODEL: AR-50

橡胶砂轮钝化机
型号：AR-50

HeFei AMT Co.,Ltd

15 Xiangyi Road, Xiaomiao Industrial Park, Shushan District, Hefei City, Anhui Province

TEL:+86 152 0152 868
E-mail : shr1811@163.com
Homepage :http://www.58shr.com/

合肥艾姆精密机械有限公司

安徽省合肥市蜀山区小庙工业园香怡路15号

电话：+86 152 0152 8687
邮箱：shr1811@163.com
主页：http://www.58shr.com/

AM TECHNOLOGY

Machine Information

MACHINERY NAME : RUBBER POLISHING MACHINE
MODEL : AR-50
SERIAL NO. : 25011G
RATING : 220V, 50Hz, 3-Phase
FABRICATED DATE : 2025. 06

设备信息

设备名称 : 橡胶砂轮钝化机
型号 : AR-50
序列号 : 25011G
额定参数 : 220V, 50Hz, 3相
制造日期 : 2025. 06

▣ INSTRUCTION MANUAL CONTENTS ▣

▣ 操作说明书目录 ▣

PREFACE.....2

前言.....2

CHAP 1. SPECIFICATION.....4
1.1 FOREWORD.....5
1.2 SPECIFICATION OF THE EQUIPMENT.....7

第1章 规格.....4
1.1 前言.....5
1.2 设备规格.....7

CHAP 2. OPERATING PROCEDURE.....9
2.1 PREPARATION OF OPERATING.....10
2.2 OPERATING PANEL.....12
2.3 AUTOMATIC MODE.....19
2.4 ELECTRONIC COMPONENT.....19
2.5 MAINTENANCE.....21

第2章 操作流程.....9
2.1 操作准备.....10
2.2 操作面板.....12
2.3 自动模式.....19
2.4 电气元件.....19
2.5 维护.....21

CAUTION!!

	Please be careful not to get your hands caught on the rising or falling of the top board.
	Be careful of collisions within equipment operating radius during operation.
	When inserting and removing the product, be careful of the sharp edges of the corner of the wheel.

注意!!

	上盘上升或下降时请注意不要让您的手夹到。
	设备运转期间，请注意工作半径范围内的碰撞风险。
	取放产品时，请当心砂轮边角的锋利部位。

Never place your hands, head, body parts, or objects that are not suitable in the work area when the equipment is in operation.

当设备运行时，不要将手、头等身体部位或不适合的物品放在工作区域内。

PREFACE
前言

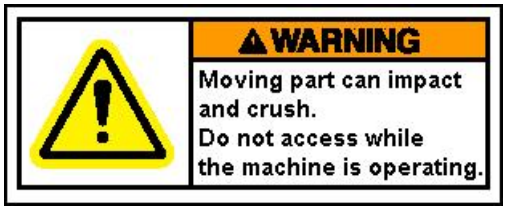

	Fire and electric shock hazard in the control panel (bottom place).
	When you check any electronic apparatus, don't forget to turn off the power.

	控制面板（底部位置）存在火灾和电击危险。
	检查任何电气设备时，切勿忘记关闭电源。

Proper use of equipment and proper maintenance not only prolongs the life of the equipment, but also helps prevent accidents during operation.

设备的正确使用和适当维护不仅能延长设备的使用寿命，也有助于防止操作期间的事故。

Therefore, be sure to read this INSTRUCTION MANUAL carefully before handling the equipment and be sure to read the instructions and precautions.

因此，在操作设备前务必仔细阅读本说明书，并务必阅读操作要点和注意事项。

In order to prevent accidents during operation and to ensure safe use, only those who are licensed or who have been trained in equipment operation in advance should be able to operate, and please comply with safety training and safety regulations before operation.

为防止操作期间的事故并确保安全使用，仅允许持证人员或事先经过设备操作培训的人员操作，操作前请遵守安全培训和安全规章。

We are not responsible for any loss or damage to property caused by negligen ce or misuse of the user.

因用户疏忽或不当操作造成的任何财物损失或损坏，我方概不负责。

Contact point: TEL +86 152 0152 8687

Homepage: http://www.58shr.com/

联系方式：电话 +86 152 0152 8687

主页：http://www.58shr.com/

CHAP 1. SPECIFICATION
第一章 规格

1.1 FOREWORD

1.2 SPECIFICATION OF THE EQUIPMENT

1.1 前言

1.2 设备规格

1.1 FOREWORD

1.1 前言

Thank you for purchasing our machine.

感谢您购买本公司的设备。

This machine was manufactured for the user's point of view, but this machine can be dangerous if inexpertly or unreasonably used.

本设备基于用户角度制造，但不熟练或不合理使用可能导致危险。

In the interest of operational safety and accident prevention, it is essential to entrust only appropriately trained or authorized personnel with the machine.

为保障操作安全及事故预防，必须仅将设备托付给经适当培训或授权的人员。

Expert and purpose-orientated operation as well as regular care and maintenance will ensure that the machine will give of its best at all times and provides long life. More-over, such attention will avoid accidents and breakdowns.

专业和以目标为导向的操作以及定期保养和维护将确保机器始终发挥最佳性能并获得较长的使用寿命。此外，这种关注将避免事故和故障。

Such personnel should continually read the appropriate CHAPs in the operating instructions and carefully apply these in practice.

相关人员应持续阅读操作说明中的相关章节，并在实践中仔细应用。

In the interest of operational safety and accident prevention, it is essential to entrust only appropriately trained or authorized personnel with the machine.

为保障操作安全及事故预防，必须仅将设备托付给经适当培训或授权的人员。

In addition, it is also essential to observe safety guidelines and accident prevention regulations as applicable in both the factory and the country in which the machine is installed insofar as such regulations refer to the use and operation of machine tools.

此外，还必须遵守工厂所在国及机床安装所在国适用的安全准则和事故预防规章，只要这些规章涉及机床的使用和操作。

Any damage to machine components and / or personnel injury created by irregular operation of the machine or by non-observance of the relevant instructions will in all cases be the responsibility of the owner or operator of the machine.

在任何情况下，因机床操作不规范或未遵守相关规程而造成的任何机床部件损坏及/或人员伤亡，概由机床所有者或操作者承担全部责任。

It is the duty of the operator to report immediately any modifications, made to t he machine, which will impair safety.

操作者有责任立即报告任何会危及安全的设备改装。

Further the user is obliged to run the machine only in a properly maintained co ndition.

此外，用户有义务仅在设备得到妥善维护的状态下运行。

Any working practice liable to affect the safety of the machine should be avoid ed.

任何可能影响设备安全性的操作行为均应避免。

The company cannot be held responsible if arbitrary alterations or additions are made to the machine.

对设备进行任意更改或增装，本公司概不负责。

When the machine have operated by several persons, it is essential to establis h accurately and to maintain who is responsible for what and who is in charge.

当多人操作机床时，必须确定各负责人以及各自的维护范围，并且保持下去。

! Any set data in this operating instruction may not be coincided with each mac hine because of each characteristic.

!因为每台机器都有其独特的特性，本操作说明中提到的设定数据可能与每台机器不一致。

COPYRIGHT

版权

These operation instructions contain precise information on technical details rela ting to the design of the machine. We reserve all rights in this document.

本操作说明包含有关设计设计技术细节的精确信息。我们保留本文档的所有权利。

This technical documentation may not be copied or made accessible without pri or consent and may not be improperly used by the recipient or in other ways.

未经事先同意，不得复制或提供本技术文件，且接收方不得以其他方式不当使用。

1.2 SPECIFICATION

1.2 规格

1. SPECIFICATION OF MACHINE

1. 设备规格

MACHINE SIZE	W1130xD950xH2100 (mm)
MACHINE WEIGHT	1,500 kg
AIR SUPPLY	5-6 kgf/㎠(0.5 – 0.6 MPa)

设备尺寸	宽1130x深950x高2100 (mm)
设备重量	1,500 kg
气源压力	5-6 kgf/㎠(0.5 - 0.6 MPa)

2. Specific of electricity

2. 电气参数

OPERATING VOLTAGE	3PHASE AC220V
CONTROL VOLTAGE	3PHASE AC220V, DC24V
FREQUENCY	50Hz
TEMPERATURE	

工作电压	三相交流220V
控制电压	三相交流220V, 直流24V
频率	50Hz
温度	

! Remark: main power connect cable

RED	WHITE	BLACK	YELLOW/GREEN
R	S	T	PE

！备注：主电源连接电缆

红色	白色	黑色	黄绿双色
R	S	T	PE

3. Motor

3. 电机

PART	SPEC.	REMARK
UPPER WHEEL	0.75 kW	0~30 RPM
LOWER WHEEL	0.75 kW	0~30 RPM
INNER GEAR	1.5KW	0~150 RPM

部件	规格	备注
上盘	0.75 kW	0~30 RPM
下盘	0.75 kW	0~30 RPM
内环齿轮	1.5KW	0~150 RPM

CHAP 2. OPERATING PROCEDURE

第2章 操作流程

2.1 PREPARATION OF OPERATING

2.2 OPERATING PANEL

2.3 AUTOMATIC MODE

2.4 ELECTRONIC COMPONENT

2.5 MAINTENANCE

2.1 操作准备

2.2 操作面板

2.3 自动模式

2.4 电气元件

2.5 维护

2.1 PREPARATION OF OPERATING

2.1 操作准备

Before turning on the power to the equipment, check the following points carefu lly.

接通设备电源前，请仔细检查以下要点：

(1) Make sure that the supplied air is dry and clean and that the pressure is adequate. It must be 0.5[MPa] or higher. The pressure range recommended by the manufacturer is 0.5 to 0.6 [MPa] (5 to 6 kg / ㎠).

(1) 确保供应气体干燥洁净且压力充足，必须达到0.5[MPa]或更高。制造商推荐压力范围为0.5至0.6 [MPa]（5至6 kg / ㎠）。

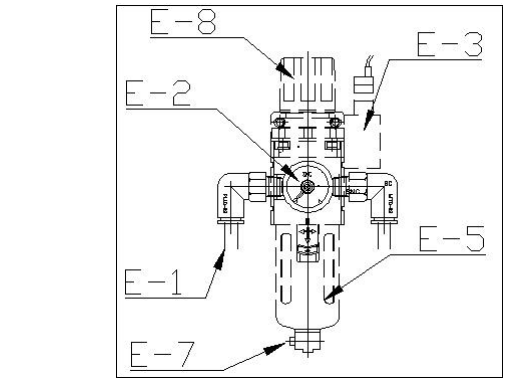

or

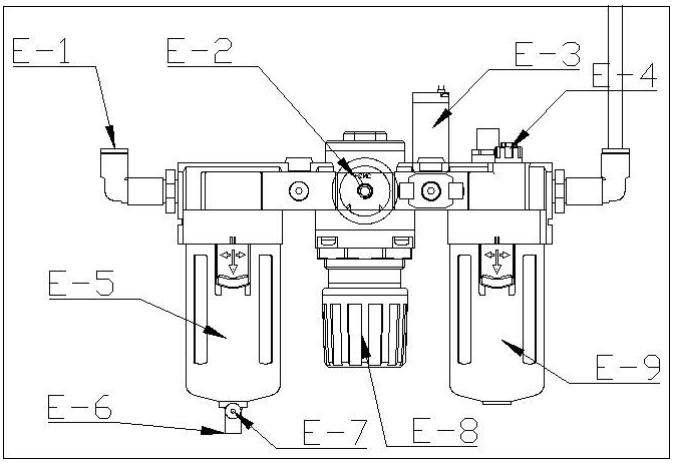

Gauge [E-2] allows you to check the air pressure supplied and adjust the pressure with the handle. To adjust the pressure, pull the handle [E-8] and rotate (CW, CCW) to adjust the pressure, then press it again to fix it.

压力表[E-2]用于检查供气压力，并通过旋钮调节压力。调节时，拉出旋钮[E-8]并旋转（顺时针/逆时针）调整压力，然后再次按压锁紧。

! The pneumatic sensor is set to 0.45MPa.

！气动传感器设定值为 0.45MPa

(2) Make sure that each fitting line and connector are tight. For example, there are cooling water inlet, cooling water outlet, cutting water inlet, cutting water o utlet, and air pressure, and there may be differences depending on the equipm ent.

(2) 确保各连接管路和接头紧固。例如：冷却液入口、冷却液出口、切削液入口、切削液出口以及气压管路，具体配置可能因设备而异。

(3) If a pressure of 0.5 MPa or less is input, it may cause an abnormal operation.

(3) 若输入压力≤0.5MPa，可能导致异常运行。

2.2 OPERATING PANEL

2.2 操作面板



1. Power On Switch

1. 电源启动开关

2. Power Off Switch

2. 电源关闭开关

3. Waiting Lamp

3. 待机指示灯

4.Operation Lamp

4. 运行指示灯

5. Manual/Automatic Switch

5. 手动/自动切换开关

6. Stop Switch

6. 停止开关

7. Upper wheel rotation Switch

7. 上盘旋转开关

8. Inner gear rotation Switch

8. 内环齿轮旋转开关



9. Lower wheel rotation Switch

9. 下盘旋转开关

10. Upper wheel up / down Switch

10. 上盘升降开关

11. Upper wheel swivel out/in Switch

11. 上盘转入/转出开关

12. Processing time Timer

12. 加工时间定时器

13. Emergency stop Switch

13. 紧急停止开关

14. Upper wheel speed volume

14. 上盘调速旋钮

15. Inner gear speed volume

15. 内环齿轮调速旋钮

16. Lower wheel speed volume

16. 下盘调速旋钮

2.2.1 Power On Switch

2.2.1 电源启动开关

This button turns the control power of the equipment on.

此按钮用于开启设备控制电源。

2.2.2 Power Off Switch

2.2.2 电源关闭开关

This button turns the control power of the equipment off.

此按钮用于关闭设备控制电源。

2.2.3 Waiting Lamp

2.2.3 待机指示灯

Lights up when the equipment is in normal operation.

设备正常运行时亮起；

It does not turn on during Main Air, Emergency stop, or Inverter alarm.

主气源故障、紧急停止或变频器报警时熄灭。

2.2.4 Operation Lamp

2.2.4 运行指示灯

Lights up during automatic operation.

自动操作期间保持常亮。

2.2.5 Manual/Automatic Switch

2.2.5 手动/自动切换开关

You can select manual and automatic mode.

用于选择手动与自动模式；

It is possible to start machining with two switches on the front only in automatic mode.

仅自动模式下，可通过面板上的两个开关启动加工。

2.2.6 Stop Switch

2.2.6 停止开关

Stops motor rotation. Press this switch during machining to stop operation.

急停电机旋转。加工过程中按压此开关立即终止运行。

2.2.7 Upper wheel direction setting and rotation Switch

2.2.7 上盘方向设定及旋转开关

When in manual mode, it rotates immediately in the selected direction.

手动模式下立即按选定方向旋转；

In automatic mode only the direction is selected and the top board is lowered and then rotated.

自动模式下仅设定方向，待上盘降落后执行旋转。

2.2.8 Inner gear direction setting and rotation Switch

2.2.8 内环齿轮方向设定及旋转开关

When in manual mode, it rotates immediately in the selected direction.

手动模式下立即按选定方向旋转；

In automatic mode only the direction is selected and the top board is lowered and then rotated.

自动模式下仅设定方向，待上盘降落后执行旋转。

2.2.9 Lower wheel direction setting and rotation Switch

2.2.9 下盘方向设定及旋转开关

When in manual mode, it rotates immediately in the selected direction.

手动模式下立即按选定方向旋转；

In automatic mode only the direction is selected and the top board is lowered and then rotated.

自动模式下仅设定方向，待上盘降落后执行旋转。

2.2.10 Upper wheel up / down Switch

2.2.10 上盘升降开关

It can be operated in manual mode and in top board inflow state.

仅限手动模式且上盘处于转入状态操作；

It is not applied in the automatic mode.

自动模式下不适用。

2.2.11 Upper wheel swivel out/in Switch

2.2.11 上盘转入/转出开关

It can be operated when the top board is raised in manual mode.

需在手动模式且上盘升起状态下操作。

2.2.12 Processing time Timer

2.2.12 加工时间定时器

t is a timer that can set machining time.

用于设定加工时长;

* The 1st pressure processing time after board descent can be set to the timer inside the box and only the processing time for the 2nd pressure can be set.

* 上盘下降后的首次加压时长可由控制箱内置定时器设定，此定时器只能调节第二次加压时长。

2.2.13 Emergency stop Switch

2.2.13 紧急停止开关

It is used to stop the equipment urgently.

设备急停装置;

This switch remains pressed when pressed and cancels any operation.

按压后维持锁定状态，中断所有操作。

2.2.14 Upper wheel speed volume

2.2.14 上盘调速旋钮

You can set the upper wheel speed using %.

按百分比设定上盘转速。

2.2.15 Inner gear speed volume

2.2.15 内齿轮调速旋钮

You can set the inner gear speed using %.

按百分比设定内环齿轮转速。

2.2.16 Lower wheel speed volume

2.2.16 下盘调速旋钮

You can set the lower wheel speed using %.

按百分比设定下盘转速。

2.3 AUTOMATIC MODE

2.3 自动模式

Please set the automatic mode using MANUAL/AUTO SWITCH on the operating panel and push the two buttons front of the machine at the same time. If the upper wheel will be swivel in and down and rotate, you can stop to push the two buttons. If you stop to push the two buttons in advance, the upper wheel will be stopped. If you push the STOP button right side of START on grinding, the upper wheel will be stop. Please set the suitable rotation direction and speed.

通过操作面板上的手动/自动切换开关选择自动模式，同时按设备上的两个启动按钮。此时上盘将转入并下降旋转，此时可松开按钮。若提前松开按钮，上盘将停止动作。研磨中按压启动按钮右侧的停止按钮可使上盘停机。请设定合适的旋转方向及转速。

2.4 ELECTRONIC COMPONENT

2.4 电气元件

In general, the lifetime of electrical parts may be shortened due to the number of uses or external factors. Please refer to the list below and apply it properly in case of failure.

通常，电气部件的寿命可能因使用次数或外部因素而被缩短。发生故障时请参照下表并正确应用它。

Name	Maker	Specification	Usage
SWITCH	Schneider	XB4-BS8442	Emergency stop
	Schneider	XB4-BD21	Power ON/OFF, Manual/Auto SWITCH
	Schneider	XB4-BD33	Top board, Bottom board, inner gear rotation direction selection
	Schneider	XB4-BD33	Upper wheel up/down, swivel in/out
	Schneider	XB4-BVB4	Operation LAMP
	Schneider	XB4-BVB3	Waiting LAMP
	Schneider	XB4-BVM5	Power LAMP
	Schneider	XB4-BW34B5	Stop
TIMER	OMRON	LE4S	H5CX-A11D-N
TIMER	OMRON	AT8N	H3CR-A8 (DC24V)
MAGNETIC CONTACTOR	LS	MC-09a	Control, inverter power switching

名称	制造商	型号	用途
开关	施耐德	XB4-BS8442	紧急停止
	施耐德	XB4-BD21	电源启停、手动/自动切换
	施耐德	XB4-BD33	上盘、下盘、内环齿轮旋转方向选择
	施耐德	XB4-BD33	上盘升降、转入/转出
	施耐德	XB4-BVB4	运行指示灯
	施耐德	XB4-BVB3	待机指示灯

	施耐德	XB4-BVM5	电源指示灯
	施耐德	XB4-BW34B5	停止
定时器	欧姆龙	LE4S	H5CX-A11D-N
定时器	欧姆龙	AT8N	H3CR-A8 (DC24V)
交流接触器	LS	MC-09a	控制信号切换及变频器电源通断

2.5 MAINTENANCE

2.5 维护

2.5.1 General Information

2.5.1 总则

Periodically check the following items to maintain the best condition of the machine.

需定期检查下列项目以保持设备最佳状态。

Therefore, read this chapter frequently and observe it carefully.

因此，请经常阅读本章并严格遵守。

2.5.2 Lubricant and Grease

2.5.2 润滑剂和润滑脂

Re-supply of grease must be performed periodically. Each element should be injected with grease gun 2-3 times every 6 months.

必须定期补充润滑脂。每 6 个月用注油枪对各部位注油 2-3 次。

※ Refer to the following figure for PORT position.

※ 注油口位置见下图。

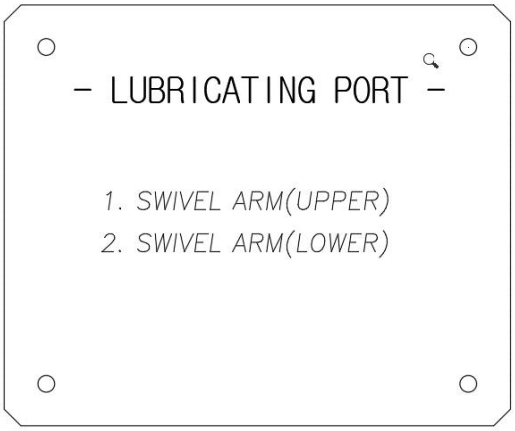

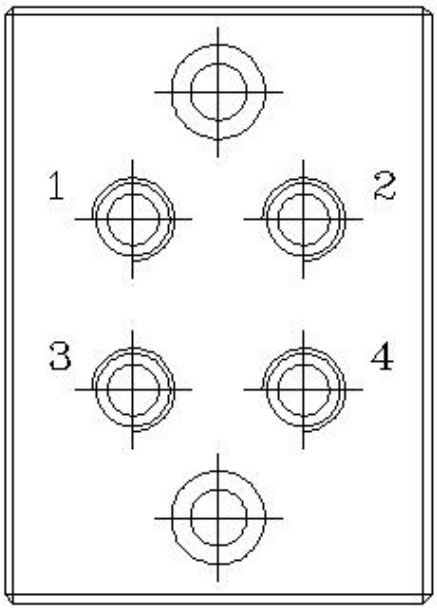

The UPPER WHEEL does not have a separate port.

上盘没有独立的注油口

Please use the grease gun directly to the area shown below.

请将注油枪直接用于下图所示区域。

