Operation Manual

High-Precision Double-Sided Grinder

Model:ADG-700
(Applicable Model: ADG-700)



WARNING!!

During operation, do not place hands or any part of your body near moving parts of the equipment!!

Catalogue

Preface 1
Equipment Hazard Areas 1
Transportation 3
Chapter 1: Specifications 4
1.1 Preface 5
1.2 Equipment Performance 6
1.3 Equipment Specifications 6
Chapter 2 Main Components 7
2.1 Upper cylinder (up/dwon) 9
2.2 Upper gear motor 9
2.3 Upper Grinding Wheel/Lower Grinding Wheel 9
2.4 Lower gear drive motor 9
2.5 Inner gear drive motor 10
2.6 Coolant supply line 10
2.7 Outer Gear 10
2.8 Outer gear cylinder (up/down) 10
2.9 Upper swivel arm cylinder (in/out) 11
Chapter 3 Operation Part 12
3.1 Control Panel 12
3.2 Instructions for Using Touchable Control Display Screen 12
3.3 Pressure setting 12
3.1 Control Panel 13
3.2 How to use the touch control screen 16
3.3 Pressure setting 24
Chapter 4 Error Information 25
4.1 Alarm Information and Handling Methods 25
4.2 In case of unexpected equipment situations 25
4.1 Alarm Information and Handling Methods 26
4.2 In case of unexpected equipment situations 38
Chapter 5 Grinding Wheel 39
5.1 Grinding wheel measurement 40
5.2 grinding wheel replacement 44
5.3 Consume 46
Chapter 6 Maintenance 47
6.1 General Notes 48
6.2 Gearbox Oil Replacement 51
6.3 Grease and Injection Point ` 54
6.4 Pneumatic Component Maintenance 55
6.5 Equipment Cleaning 56
6.6 Height Adjustment of Measurement Probes 57
6.7 Probe Setting 58
6.8 Semi-Automatic Loading/Unloading Function 59
6.9 Connection of Auxiliary Components 64
※Machine operation steps 66

Preface

Equipment Hazard Areas

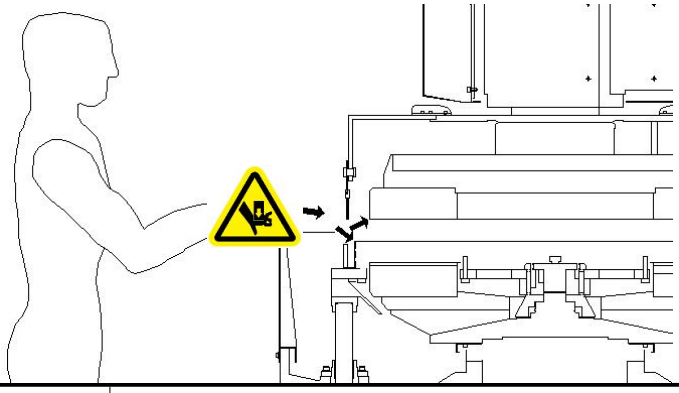

	When working at heights on equipment, be careful not to slip!!
	Maintain input air pressure greater than 0.4 Mpa!
	The main pressure should not exceed 0.4 Mpa!
	Do not touch the display screen with sharp objects or too much force!
	Regularly check for coolant leaks! 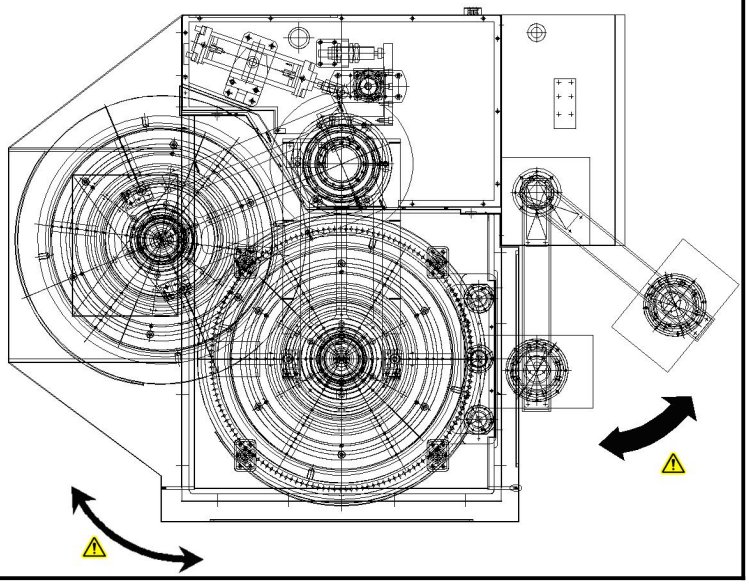

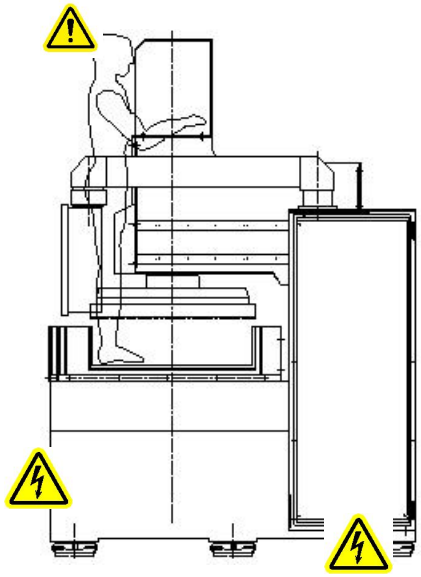

	Electrical shock risk at control panel base (button area).
	Always disconnect power before inspecting electrical components.

※Note：

Any damage or injury caused by improper operation or non-compliance with safety protocols is the sole responsibility of the owner/operator.

Device Power-off state

When shutting down the equipment, please first turn in the upper and lower it onto the surface of the lower.

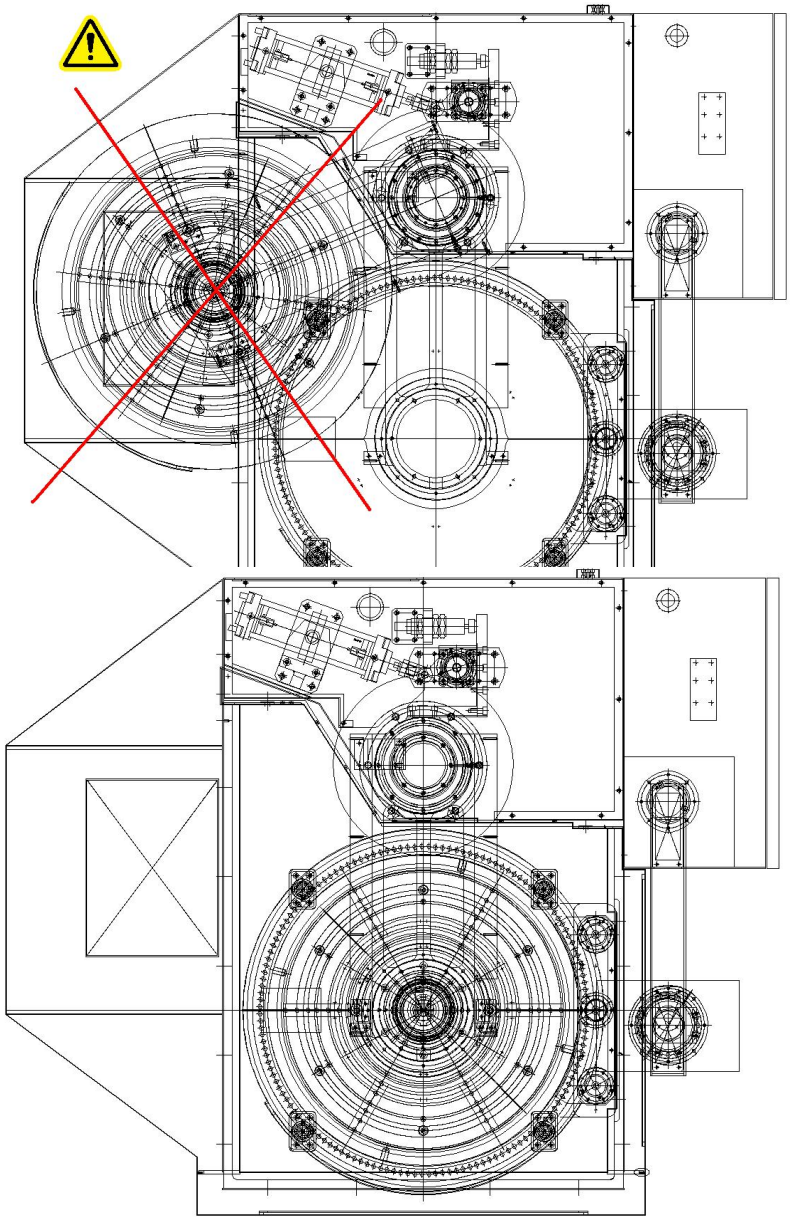

Transportation

Use a forklift for equipment handling.

WARNING: Never stand or walk under raised load arms!!

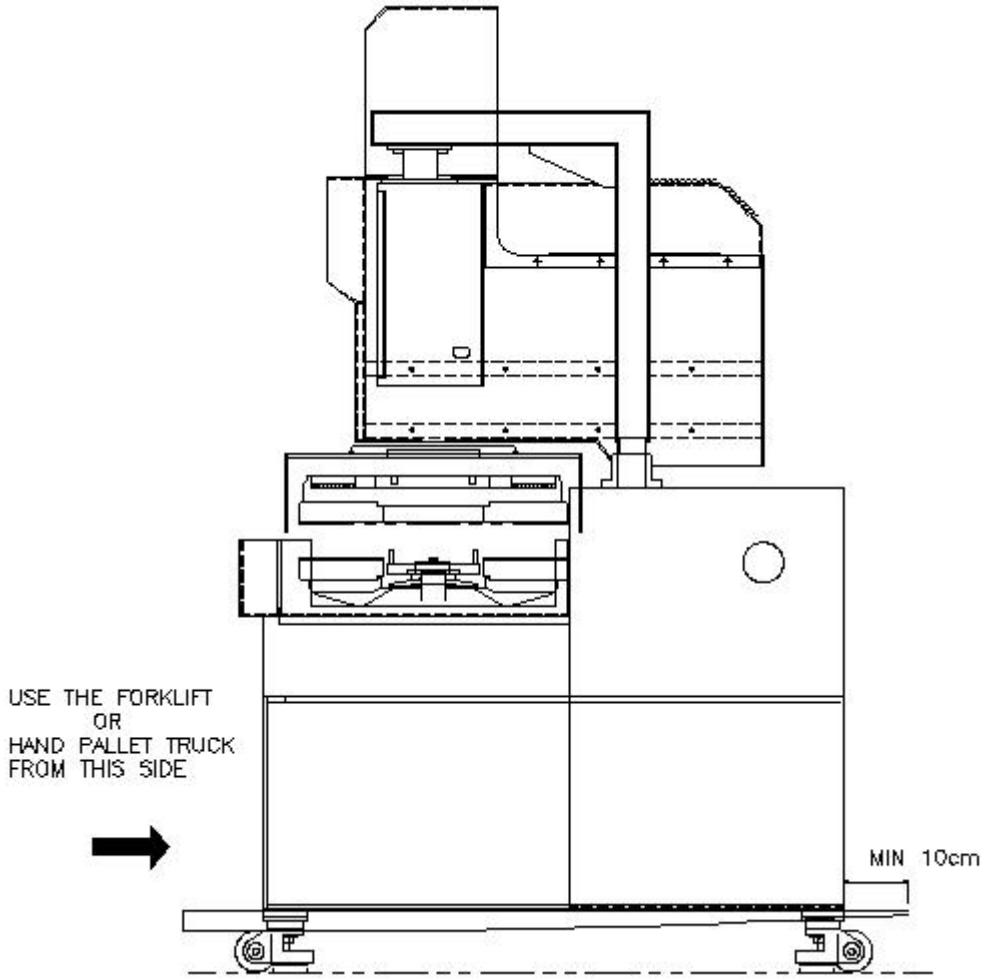

WARNING: Never stand or walk under raised load arms!!

Chapter 1: Specifications

1.1 Preface

1.2 Equipment Performance

1.3 Equipment Specifications

1.1 Preface

First of all, thank you for purchasing our DSG series products.

The DSG series products are designed from the user's perspective. Incorrect or unreasonable operation may cause danger.

For operational safety and accident prevention, please designate specific personnel for training and equipment operation. Proper operation can improve processing efficiency, extend the service life of the equipment, and avoid accidents.

Operators should regularly read the operation manual and apply it to practical operations. During the use of the equipment, national and factory safety regulations and accident prevention rules must also be followed.

Any damage to the equipment or personal accidents caused by non-compliance with safety regulations and operation instructions shall be the responsibility of the equipment owner or operator. In the event of any unexpected situation with the equipment, operators must promptly report to the relevant person in charge to resolve the issue in a timely manner.

The equipment can only be started under proper maintenance conditions. Any operations that affect equipment safety should be avoided as much as possible. Our company shall not be liable for any issues caused by unauthorized modifications to the equipment or the addition of other accessories.

During the machine's service life, a reasonable maintenance and management system should be established and implemented, with clear responsibilities for maintenance personnel and equipment managers.

Copyright Notice:

The operation manual involves detailed technical information of the equipment, so we reserve the right to modify this manual.

This document may not be photocopied or modified in any other form without consent.

1.2 Equipment Performance

①The ADG-700 machine is a precision device that adopts three-phase independent drive and numerical control.

②The machine adopts a cast iron structure with excellent anti-vibration function, which maximally suppresses the occurrence of vibration phenomena and ensures the best static and dynamic stiffness.

③The ADG series machine is equipped with touch screens and digital size control, which provide convenience for operators to operate the equipment simply and accurately.

1.3 Equipment Specifications

Size（mm）	1600 X1630X2350
Weight（Kg）	2800
Air Pressure	5-7 Kgf/㎠(0.5－0.7 MPa)

Voltage	380V，3-Phase
Control voltage	AC 220V， DC24V
Frequency	50Hz
Temperature	5 - 40 ℃

Drive

Regional	Motor Type	Specifications	Maximum Speed
Upper Drive Motor	Gear Motor	3phase 5.5 kW	75RPM
Lower Drive Motor	Gear Motor	3phase 5.5kW	75RPM
Inner Gear Drive Motor	Servo Motor	3phase 2.0kW	50RPM

Chapter 2 Main Components

2.1 Upper Cylinder (Up/Down)
2.2 Upper Gear Drive Motor
2.3 Upper Grinding Wheel/Lower Grinding Wheel
2.4 Lower Gear Motor
2.5 Inner Gear Drive Motor
2.6 Coolant Supply Line
2.7 Outer Gear
2.8 Outer Gear Cylinder (Up/Down)
2.9 Upper Swivel Arm Cylinder (In/Out)

Main Components

① Upper Cylinder (up/down)

② Upper Gear Motor

③ Upper Flange

④ Lower Flange

⑤ Lower Gear Drive Motor

⑥ Inner Gear Drive Motor

⑦ Coolant Filling Ring

⑧ Outer Gear

⑨ Outer Gear Cylinder (Up/Down)

⑩ Upper Swivel Arm Cylinder (In/Out)

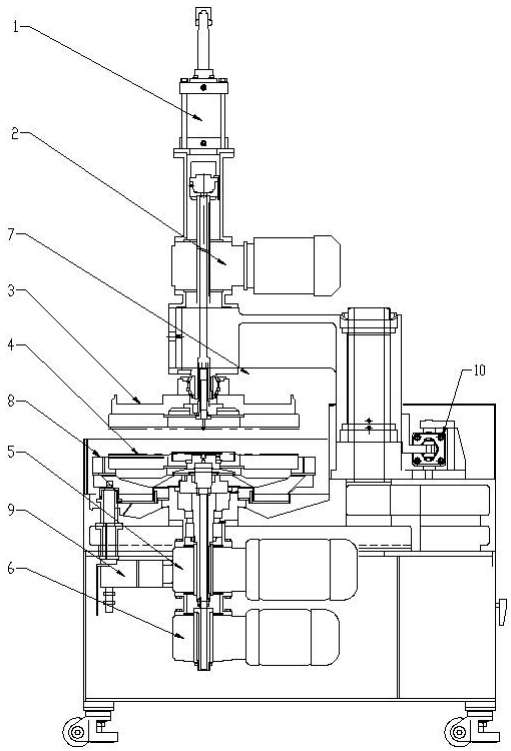

2.1 Upper Cylinder (Up/Dwon)

A large capacity cylinder that controls the upward/downward movement of the upper.

The upper is a very important part, and in order to make accurate movements according to different pressure changes, we have chosen a large capacity cylinder.

In order to process workpieces made of harder materials, a large capacity cylinder is installed to obtain greater pressure for accurate and rapid processing.

Our uptrend/downtrend speed is adjustable.

For example, when processing thinner workpieces, the speed at which the upper descends needs to be slowed down to ensure that the upper does not crush the workpiece.

In order to achieve the purpose of adjustable upper speed, we have installed a speed regulator on the cylinder.

And it also achieves segmented descent speed of the upper, better ensuring that the workpiece does not collide with the upper and cause damage.

2.2 Upper Gear Motor

By using a German motor directly connected to the rotating shaft, vibration is reduced and a larger rotational torque is obtained.

2.3 Upper Grinding Wheel/Lower Grinding Wheel

Diamond wheel/CBN wheel

High processing speed and precision, clean working environment.

2.4 Lower Gear Drive Motor

The lower is equally important as the upper.

When applying pressure to the upper, the lower also experiences significant pressure.

When the lower load rotates at high speed, it requires particularly high speed and rotational torque.

So a large capacity motor was used to ensure high torque and improve processing speed.

2.5 Inner Gear Drive Motor

It provides power for carrier rotation. Its rotational speed directly affects the processing quality, so it is very important to be familiar with the speed ratio of the upper, lower, and inner gear.

2.6 Coolant Supply Line

In the double-sided grinding operation, the choice of coolant should be based on the model of the grinding wheel and the workpiece.

The coolant is supplied to the equipment through the cooling water supply line and discharged into the water tank for centralized decontamination treatment and cooling.

2.7 Outer Gear

Double sided grinding machine is a device that needs to adapt to large capacity processing, so simple operation and high processing efficiency are the biggest concerns for customers. In order to reduce the loading and unloading time of the load carries during loading/unloading, our company has designed the outer gear as a movable part to improve the loading and unloading time, greatly shorten the processing time, and improve the processing efficiency. But the distance between the outer gear and the inner gear is very important. If the distance between the outer gear and the inner gear is not consistent, it will cause collision of the carrier during processing, resulting in damage to the carrier, scrap of the workpiece, and serious consequences such as damage to the grinding wheel. If the distance between the outer gear and the inner gear is not consistent, loosen the four screws that fix the outer gear, readjust the position of the outer gear, and tighten it.

2.8 Outer Gear Cylinder (Up/Down)

Double sided grinding equipment is a device that needs to adapt to large-scale and diverse processing,requiring frequent replacement of the carrier or loading and unloading of workpieces.

Using cylinders to control the rise/fall of the outer gear improves safety during machining, solves many inconveniences during machining, and enhances efficiency.

2.9 Upper Swivel Arm Cylinder (In/Out)

For the convenience of loading and unloading workpieces, our company's designed upper is different from other companies as it can freely rotate to a safe position and processing position. And for the safety of rotation, sensors for detecting safe positions are added in this program to ensure the safety of machine users.

Chapter 3 Operation Part

3.1 Control panel

3.2 Instructions for using touch screen

3.3 Pressure setting

3.1 Control Panel

1) EMERGENCY SWITCH
2) MONOLEVER SWITCH(Upper ascending and descending/turning in/out)
3) [START] SWITCH
4) [STOP] SWITCH
5) [INNEER GEAR ROTATION] SWITCH
6) [LOADING and UNLOADING] SWITCH
7) [Outer Gear Up] SWITCH
8) [Outer Gear Down] SWITCH
9) [Coolant] SWITCH

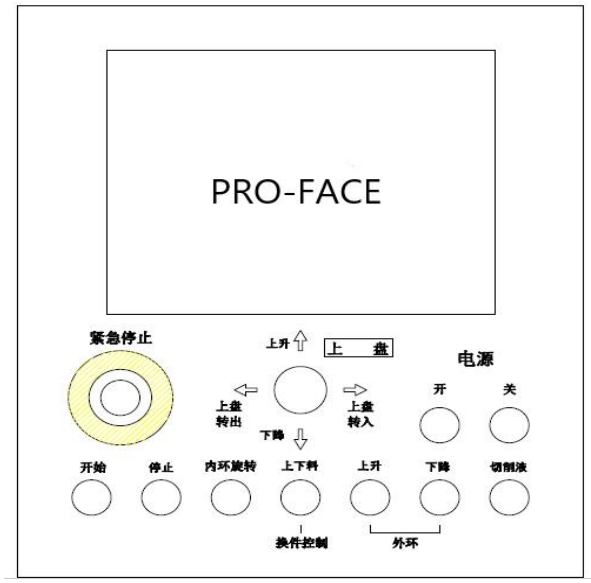

Touch Screen

Adopting PRO-FACE touchable control touch screen

It can be used for input and display, and the operation is very simple. Just touch the screen with your finger, and the display system can display the control conditions of the device in real time. Through it, you can easily and quickly check the processing conditions and abnormal phenomena of the equipment, achieving repeated processing under the same processing conditions.

1) Emergency switch

Use this button in case of abnormal device operation or safety issues.

The method to lift the emergency stop is to rotate this button clockwise slightly to pop it out.

2) Monolever SWITCH

This lever is used to control the up and down movement, as well as the in and out movement of the upper.

Move this lever up and down, and the upper will move up and down accordingly.

During the processing, the upper and lower cannot be moved, so the operating lever will also fail.

The upper can only be moved up and down during the transfer.

Note:

After adjusting the probe, please check if there is any collision before turning in, turning out, and moving up and down the upper.

When changing the grinding wheel, please check whether the probe collide with the grinding wheel before performing the rotation and up/down movement of the upper.

3) [Start] switch

This button is used for dressing grinding wheels or equipment processing; ①When the equipment is in the dressing mode and the upper is in the processing position, pressing the start button will automatically dress the grinding wheel;②When the equipment is in processing mode, the upper is in any position. Press the start button, and the equipment will automatically process until the set size is reached. The equipment will stop and the upper will move to the loading position.

4) [Stop] switch

This button is used for trimming mode or processing mode.When the equipment is in the trimming or processing process and we want to manually stop the process, pressing the stop button will stop the equipment from running and maintain its current state.

5) [Inner Gear Rotation] switch

Press and hold this button, and the inner gear will rotate at the set speed. It is generally used to adjust the position of the outer gear and check the placement of the product.

6) [loading and unloading] switch

This button is used for loading and unloading materials, and when pressed, it will automatically divide and rotateaccording to the set number of carriers.

7) [Outer Gear up] switch

This button is used to raise the outer gear after the feeding is completed.

8) [Outer Gear Down] switch

This button is used for loading and unloading. When pressed, the outer gear column near the loading platform will descend for easy loading and unloading.

9) [Coolant] switch

Press this button to activate the cooling pump.

During automatic processing, the coolant pump will start working without pressing this button.

3.2 How to use the touch screen

3.2.1 Use touch screen

3.2.1.1 Process Parameters



Firstly, please click on "LIST" to enter the parameter menu, select any menu in the left list box, and then press the [Import] key. You can enter the processing interface of the corresponding parameters.



The menu has a total of 500 storage units, which can store 500 different workpiece processing parameters.

By selecting the confirmed target parameters and clicking 'Import', all parameters can be imported into the process parameter interface.



Table 1: The "upper", "lower", "inner gear", and "pressure" can be set for each stage.

The equipment processing technology is divided into five stages:							
Stages	Time	Upper	Lower	Inner gear	Pressure	Rotation direction	
	min/sec	rpm	rpm	rpm	kPa	UPPER	UPPER
1.	3	10	10	8	100	CW	CCW
2.	3	20	20	16	200	LOWER	LOWER
3.	3	30	30	24	300	CW	CCW
4.	3	20	20	16	200	INNER	INNER
5.	3	10	10	8	100	CW	CCW

According to the actual situation, the process ″speed″, ″pressure″, ″rotation direction″, etc. can be adjusted.

Grinding Wheel Usage Time

Records the cumulative total operating time of the grinding wheel.

Dressing Time

Tracks the total time spent on grinding wheel dressing.

Workpiece Thickness

Displays the real-time height value from the dimension controller when the grinding wheel is lifted (maximum value:24 mm).

Alert: Adjust promptly if the value approaches 24 mm to avoid damage.

Rotation Direction

Refer to Table 1 for spindle rotation directions in different modes.

Overall Processing Time

Cumulative duration from process initiation to completion.

Processing Times

Time taken for a single machining cycle (start to finish).

Processing Times

The total number of processing times under the process parameter mode named "0".

After completing one processing, the count increases by "1".

Reset Count: Press and hold this interface to restart the counter.

LIST：

Opens the menu list. Configured parameters are saved to the menu list and When needed, open itand make the Settings.

SAVE：

After setting the process parameters, long press the SAVE key to save the current settings.



Upper Delay

Value "1" : Upper starts 1 second after command.

Value "0" : Upper starts **immediately** (no delay).

Inner Rotation

Available number of carriers: 6 (DSG-700 series),a maximum of 6 carriers can be placed.

Recommended Minimum: 5 carriers for stable operation.

Upper Position

Rotate-out Position:

After completing 5 machining steps, the upper automatically rotate out without manual intervention.

Rotate-in Position:

After completing 5 machining steps, the upper remains in position.

Rotate-out Position:

After completing 5 machining steps, the upper **automatically rotate out** without manual intervention.

Rotate-in Position:

After completing 5 machining steps, the upper **remains in position.**

Safety Thickness

The sensing time for safety thickness shall be no less than 5 seconds.

Standby Mode

For example, with a default setting of 60 minutes, the machine tool automatically enters hibernation mode after 60 minutes of inactivity, preventing the loss of machine data and machining parameters.

To resume machining, lightly tap anywhere on the screen.

※ In processing mode, the rotation direction of the upper and lower grinding wheels in the processing mode should be consistent with that in the dressing mode.

3.2.1.2 Dressing Settings



The dress mode consists of three steps. Each stage can have its own dressing time, upper and lower speed steering, and pressure during dressing.The three-stage setting can make the dressing wheel enter the dressing state more smoothly.

3.2.1.3 Manual mode setting

If you want to operate manually, you can choose this mode.



Manual mode can be used during manual processing and maintenance of equipment.

First-Stage Descent Pressure

Set the pressure value when the upper descends from the starting position.

Second-Stage Descent Pressure

Set the pressure value after the upper passes the sensor position.

Third-Stage Upper Pressure

This stage corresponds to the third phase of machining.

To zero the size controller:

1. Lower the upper.

2.Apply **main pressure** and then zero.

Motor Rotation

The speed and direction of each motor can be set separately.

Number of carriers

Enter the number of carries to be placed in one plate for automatic loading and unloading.

Equipment Status

When an error occurs, the input status of the device can be checked.

3.3 Pressure Setting

3.3.1 Boost Voltage

This pressure is the upward pressure of the upper

Generally set to 0.2-0.23 MPa (2-2.3 kg/㎠).

3.3.2 Main Pressure (3 stages)

At this stage, the pressure is mainly the processing pressure.

When the thickness of the workpiece is thin, excessive pressure can easily damage the workpice.

This setting has a significant impact on processing time and efficiency.

Chapter 4 Error Information

4.1 Alarm Information and Handling Methods

4.2 In case of unexpected equipment situations

4.1 Alarm Information and Handling Methods

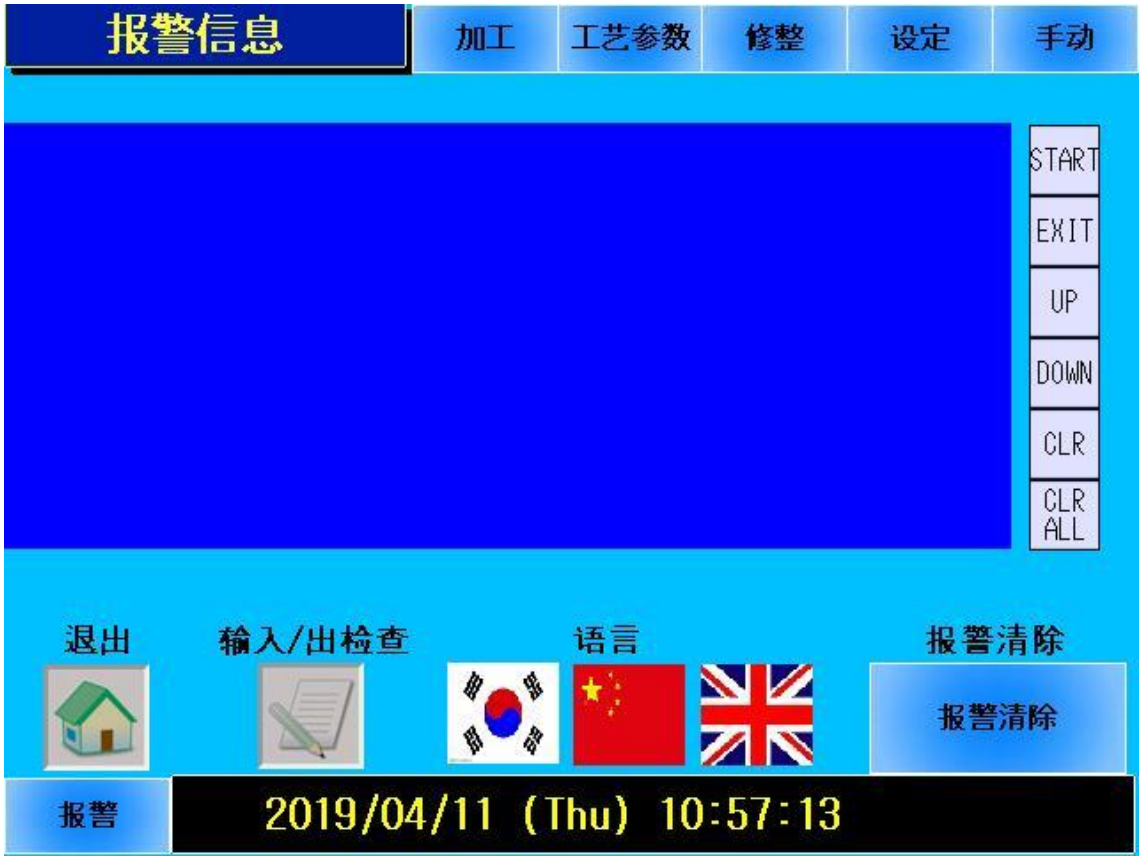

Information	Solution
A001 : Release the emergency stop button	Rotate the emergency stop switch to the right
A002 : Safety relay circuit is in OFF state	CR1 relay has not actuated; check the CR1 relay circuit.
A003 : Circuit breaker is in OFF state	CP5 circuit breaker has not actuated; check the CP5 circuit breaker circuit
A004 : Electromagnetic contactor is in OFF state	MC6 contactor has not actuated; check the MC6 contactor circuit
A005 : Upper drive inverter is in alarm status	Check the alarm code of the upper inverter and handle it according to the code information.
A006 : Lower drive inverter is in alarm status	Check the alarm code of the lower inverter and handle it according to the code information

Information	Solution
A007：Inner-loop servo motor amplifier is in alarm state	Check the servo driver alarm code and handle it according to the corresponding solution based on the code information
A008：The coolant supply pump is in an overloaded state | The water pump is overloaded	Turn off the equipment, wait for a short time, then restart it
A009 : Low compressed air pressure	Insufficient inlet pressure. Check the inlet pressure and the inlet pressure sensor
A010：Exceeded the probe's measurement limit	The probe has not touched the reference. Check the dimension controller extension amount
A011：Outer-loop is at the upper limit position	Check the outer-loop upper limit sensor.
A012：Outer-loop is at the lower limit position	Check the outer-loop lower limit sensor.
A013 : PLC CPU error	PLC CPU hardware error, Check the PLC.
A014 : Ethernet communication error	Check the network cable connecting the PLC and the touch screen
A015 : PLC D/A card error	PLC D/A hardware error,Check the PLC
A016 : PLC positioning card error	PLC positioning card hardware error, Check the PLC

*Inverter fault code

[Pre charging fault] (CrF)， [Over speed fault] (SOF)， [Automatic adjustment malfunction] (tnF) 和 [Brake logic control malfunction](bLF)Remote reset can be performed using a logic input。

([fault management] (FLt-) menu(Page 93) [Fault Reset] (rSF) parameter)。

Code	Name	Possible Causes	Corrective Actions
bLF	[Brake logic control malfunction]	• Not reaching the brake release current • Brake suction and frequency threshold [brake suction and frequency] (bEn)=[No] (not set), and brake logic control [brake control configuration] (bLC) is also assigned • Missing one phase in the output of the frequency converter • Output contactor open	• Check the connection of the frequency converter/motor. • Check the motor winding. • Check the [Forward Brake Release Current] (Ibr) setting in the [Application Function] (FUn -) menu (page 86). • [Brake suction and frequency] (bEn) (pages 85 and 86) adopts the recommended settings.
CrF	[Pre charging fault]	• The pre charging relay controls or damages the pre charging resistor	• Replace the frequency converter.
EEF	[EEPROM malfunction]	• Internal memory	• Check the environment(electromagnetic compatibility). • Replace the frequency converter.
IF1	[Internal malfunction]	• Rated specifications unknown	• Replace the frequency converter. • Restart the frequency converter. • Contact the representative of Schneider Electric.
IF2	[Internal malfunction]	• HMI card not recognized • HMI card incompatible • No monitor	
IF3	[Internal malfunction]	• EEPROM	
IF4	[Internal malfunction]	• Industrial EEPROM	

Code	Name	Possible Causes	Corrective Actions
OCF **O.CF** **OC.F**	[Overcurrent]	• The parameters in the [Settings] (SEt -) and [Motor Control] (drC -) menus are incorrect. • Inertia or load too high • Mechanical locking • Phase/grounding motor short circuit • Full resistance short circuit	• Check the parameters in [Settings] (SEt -) (page 33) and [Motor Control] (drC -) (page 42). • Check the dimensions of the motor/frequency converter/load. • Check the status of relevant devices.

SCF **SC.F**	[Motor short circuit]	• Inverter output short circuit • There is a significant ground leakage current at the output of the frequency converter (if several motors are connected in parallel) • Inverter output grounding	• Check the cables connecting the frequency converter to the motor and the motor insulation. • Reduce the switching frequency. • Connect the reactor in series with the motor.
SOF	[Speeding]	• Instability • Drive load too high	• Check the motor, gain, and stability parameters. • Add a braking resistor. • Check the dimensions of the motor/frequency converter/load.

Code	Name	Possible Causes	Corrective Actions
CnF	[Network malfunction]	• Communication failure detected on communication card	• Check the environment (electromagnetic compatibility). • Check the connection. • Check timeout. • Replace the option card. • Refer to page 94 [CANopen Fault Management] (COL) parameters, use • (CnF) Define stop mode
COF	[CANopen malfunction]	• CANopen bus communication interruption	• Check the communication bus. • Refer to the relevant product documentation.
EPF	[External malfunction]	• Related to users	• Related to users.
ILF	[Pre charging fault]	• The communication card of the frequency converter has detected a fault through identification	• Check if the option card is compatible with the frequency converter • Replace the option card.
LFF	[4-20mA missing]	• Input 4-20 mA missing on AI3	• Check the connection on input AI3.
ObF	[Excessive braking]	• Braking too fast or driving the load	• Increase deceleration time. • Install a braking resistor as needed. • Activate the BRA function (page 67) if it is

			compatible with the application.
OHF	[Inverter overheating]	• The temperature of the frequency converter is too high	• Check the motor load, frequency converter ventilation, and environmental conditions. Wait for the frequency converter to cool down before restarting.

Code	Name	Possible Causes	Corrective Actions
OLF	[Motor overload]	• Triggered due to high motor current • [Cold state stator resistance] (rSC) parameter value error	• Check the [Motor Thermal Current] (ItH) setting of the motor thermal protection function (Page 34), check the motor load. Wait for the frequency converter to cool down before restarting. • Remeasure the cold stator resistance (rSC) (page 43).
OPF	[Motor phase loss]	• A phase is missing at the output end of the frequency converter • Output contactor disconnected • Motor not connected or motor power too low • Instantaneous instability of motor current	• Check the connection from the frequency converter to the motor. • If an output contactor is being used, the [Output Phase Loss] (OPL) should be set to [Output Cut Off] (OAC) (Fault Management] (FLt -) menu (page 97)). • Testing with or without a low-power motor: In factory settings mode, the motor output phase loss detection is effective ([Output Phase Loss] (OPL)=[Yes] (YES)). To check the frequency converter in a testing or maintenance environment without switching to a motor with the same rated specifications as the frequency converter (especially useful for high-power frequency converters), the motor phase loss detection (OPL) should be turned off= • [No] (nO). • Check and optimize the parameters of [IR Compensation] (UFr), [Motor Rated Voltage] (UnS), and [Motor Rated Current] (nCr), and perform one [Automatic Adjustment] (tUn) operation (page 44).
OSF	[Power overvoltage]	• Line voltage too high • The power supply of the line is interfered with	• Check the voltage of the circuit.
PHF	[Input phase missing]	• Inverter power supply error or one of the fuses is blown • Fault in a certain phase • Using three-phase on a single-phase line power supply • ATV312 • Load imbalance • This protection function is only used for on load frequency converters	• Check the power connection and fuse. • Reset. • Use a three-phase power supply. • Disable the detection function by setting [Input Phase Loss] (IPL)=[No] (nO) (Fault Management] (FLt -) menu (page 97)).

tnF	[Automatic adjustment fault]	• Special motors or motors with power unsuitable for frequency converters • The motor is not connected to the frequency converter	• • Confirm the presence of the motor during automatic adjustment. • If an output contactor is being used, it should be closed during the automatic adjustment process.

Fault detection code that resets immediately after the cause of the fault disappears

Code	Name	Possible Causes	Corrective Actions
CFF	[Wrong configuration]	• The current configuration is inconsistent • Add or remove an option	• Return to factory settings or restore backup configuration (if valid), refer to [Restore Configuration] (FCS) Parameters (page 47).
CFI	[invalid configuration]	Invalid configuration Inconsistent configuration loaded into the frequency converter through serial link	• Check the configuration loaded earlier. • Load a consistent configuration.
USF	[undervoltage]	• The power supply voltage of the line is insufficient • Instantaneous voltage drop • Pre charging resistor damaged	• Check the voltage and voltage parameters. Trip threshold in [Under Voltage] (USF): ATV312ppppM2: 160 V ATV312ppppM3: 160 V ATV312ppppN4: 300 V ATV312ppppS6: 430 V • Replace the frequency converter.

*Servo drive alarm code

	Number	alarm code			Name	DETAIL DISPLAY	Detailed Name	Stop Mode (Note 2，3)	Release of alarm		
		CN122 (Bit 2)	CN123 (Bit 1)	CN124 (Bit 0)					Alarm Reset (RES)	Press the "SET" button on the current screen	Power OFF →ON
alarm	10	0	1	0	under voltage	10.1	Control circuit power supply voltage too low	DB	O	O	O
						10.2	The main circuit power supply voltage is too low	SD			O
	12	0	0	0	Memory exception 1 (RAM)	12.1	RAM exception1	DB			O
						12.2	RAM exception2	DB			O
						12.4	RAM exception4	DB			O
						12.5	RAM exception5	DB			O
	13	0	0	0	Clock abnormality	13.1	Abnormal control clock1	DB			O
						13.2	Abnormal control clock2	DB			O
	14	0	0	0	Control and handle exceptions	14.1	Control and handle exceptions1	DB			O
						14.2	Control and handle exceptions2	DB			O
						14.3	Control and handle exceptions3	DB			O
						14.4	Control and handle exceptions4	DB			O
						14.5	Control and handle exceptions5	DB			O
						14.6	Control and handle exceptions6	DB			O
						14.7	Control and handle exceptions7	DB			O
						14.8	Control and handle exceptions8	DB			O
						14.9	Control and handle exceptions9	DB			O
						14.A	Control and handle exceptions10	DB			O
	15	0	0	0	Memory exception2 （EEP-ROM）	15.1	EEP-ROM abnormal when power is turned on	DB			O
						15.2	EEP-ROM abnormality during operation	DB			O

16	1	1	0	Initial communication abnormality of encoder1	16.1	Encoder initial communication receiving data exception1					O
					16.2	Encoder initial communication receiving data exception2					O
					16.3	Encoder initial communication receiving data exception3					O
					16.5	Encoder initial communication sends abnormal data1					O
					16.6	Encoder initial communication sends abnormal data2					O
					16.7	Encoder initial communication sends abnormal data3					O
					16.A	Initial communication abnormality of encoder1					O
					16.B	Initial communication abnormality of encoder2					O
					16.C	Initial communication abnormality of encoder3					O
					16.D	Initial communication abnormality of encoder4					O
					16.E	Initial communication abnormality of encoder5					O
					16.F	Initial communication abnormality of encoder6					O
17	0	0	0	Abnormal substrate	17.1	Abnormal substrate1					O
					17.3	Abnormal substrate2					O
					17.4	Abnormal substrate3					O
19	0	0	0	Memory exception 3 （FLASH-ROM）	19.1	FLASH-ROM exception1					O
					19.2	FLASH-ROM exception2					O
1A	1	1	0	Abnormal combination of servo motors	1A.1	Abnormal combination of servo motors					O
1E	1	1	0	Initial communication abnormality of encoder2	1E.1	encoder failed					O
1F	1	1	0	Initial communication abnormality of encoder3	1F.1	Encoder incompatible					O
20	1	1	0	Encoder regular communication abnormality1	20.1	Encoder communication receives abnormal data1					O
					20.2	Encoder communication receives abnormal data2					O
					20.3	Encoder communication receives abnormal data3					O
					20.5	Encoder communication sends abnormal data1					O
					20.6	Encoder communication sends abnormal data2		O	O		O
					20.7	Encoder communication sends abnormal data3					O
					20.9	Encoder communication sends abnormal data4					O
					20.A	Encoder communication sends abnormal data5					O
21	1	1	0	Encoder regular communication abnormality2	21.1	Encoder data exception1		O	O		O
					21.2	Encoder data update exception					O
					21.3	Encoder data waveform abnormality		O	O		O
					21.5	Encoder hard disk abnormality1					O
					21.6	Encoder hard disk abnormality2		O	O		O
					21.9	Encoder data exception2					O
24	1	0	0	Main circuit abnormality	24.1	Grounding detection of hard disk detection circuit					O
					24.2	Grounding detection for software detection and processing					O
25	1	1	0	Absolute position loss	25.1	The absolute position of the servo motor encoder disappears					O
					30.1	Abnormal heat dissipation during regeneration		(Note1)	(Note1)	(Note1)	

	30	0	0	1	Abnormal regeneration (Note 1)	30.2	Abnormal regeneration signal		(Note1)	(Note1)	(Note1)
						30.3	Abnormal regeneration feedback signal		(Note1)	(Note1)	(Note1)
	31	1	0	1	OVERSPEED	31.1	Abnormal motor speed				O
	32	1	0	0	Over current	32.1	Overcurrent detection of hard disk detection circuit (in operation)				O
						32.2	Overcurrent detection for software detection and processing (in operation)				O
						32.3	Overcurrent detection of hard disk detection circuit (stopped)				O
						32.4	Overcurrent detection for software detection processing (stopped)		O	O	O
	33	0	0	1	Overvoltage	33.1	Abnormal voltage in the main circuit		O	O	O
	35	1	0	1	Abnormal instruction frequency	35.1	Abnormal instruction frequency				O
	37	0	0	0	Parameter exception	37.1	Abnormal parameter setting range				O
						37.2	Abnormalities caused by parameter combinations				O
	3A	0	0	0	Abnormal surge current suppression circuit	3A.1	Abnormal surge current suppression				O

4.1.2 Error operation information prompt

Information	Solution
A009: First, Down the Outer Gear!!	Lower the outer gear first before proceeding to the next step
A010: First, Swivel Out	First, transfer the upper out
A011: First, Down the Upper!	First, lower the upper
A012: First, Stop the Motor!!	Stop the motor (upper, lower or inner gear) from rotating first
A013: Wrong Input at CPH or CPL!!	The CPH and CPL values on the probe sensorare set incorrectly
A014: Swiveling in time over!!	Check the sensors on the corresponding cylinder
A015: Upper goes up time over!!	Check the Counter load value or the sensor of the upper cylinder
A016: Clamping Up time over!!	Check the part of fixed cylinder
A017: Clamping Down time over!!	Check the part of fixed cylinder
A018: Outer Gear goes up time over!!	Check the outer gear
Information	Solution

A019: First, Up the Outer Gear!!	First, raise the outer gear
A020: Process time > ‘0’ (Must be)!!	Set processing time greater than '0'
A021: Check to Pressure setting	Check pressure settings
A022: Check the Door Safety switch!!	Do not open this door during the work proces s. And check the safety sensor of the door
A023: First, Move to Index Origin Position!!	First, move to the starting position
A024: Wait until the Inner gear Stopped!!	Wait until the inner gear stops
A025: Check the location of Loading Table!!	Check the carrier and position sensor.
A026: You can’t use this icon under working process!!	Do not touch this icon until the processing is complete. Or stop processing before pressing this button.
A027: Touch [USE?] first!!	option
A028: Select Auto Mode First.	option

A029: Move the Facing Unit to Origin Position.	option
A030: Facing Could be Started in Dress Mode.	option
A031: Hardware Limit Position at Facing Unit.	option

4.2 In case of unexpected equipment situations

Sometimes machines or software may encounter errors. In such cases, please record the situation as detailed as possible in the following way, and we will resolve the matter as soon as possible.

4.2.1 Equipment status at the time of event occurrence

Summarize the situation in detail, contact us, and send it to us in the form of an attachment. The file content should include: what you were doing at that time, the processing mode and process, and the menu display content of the equipment; The consequences of the problem occurring.

4.2.2 Photos of Equipment Errors

Send us photos of the damaged workpiece or machine.

Chapter 5 Grinding Wheel

5.1 Grinding wheel measurement

5.2 Replacement of grinding wheel

5.3 Consumption

5.1 Grinding wheel measurement

5.1.1 Flat grinding wheel

You must regularly check the flatness and flatness standard environment of the grinding wheel. Please use a flat measuring gauge to check the flatness of the grinding wheel and adjust the grinding wheel in the dressing mode.

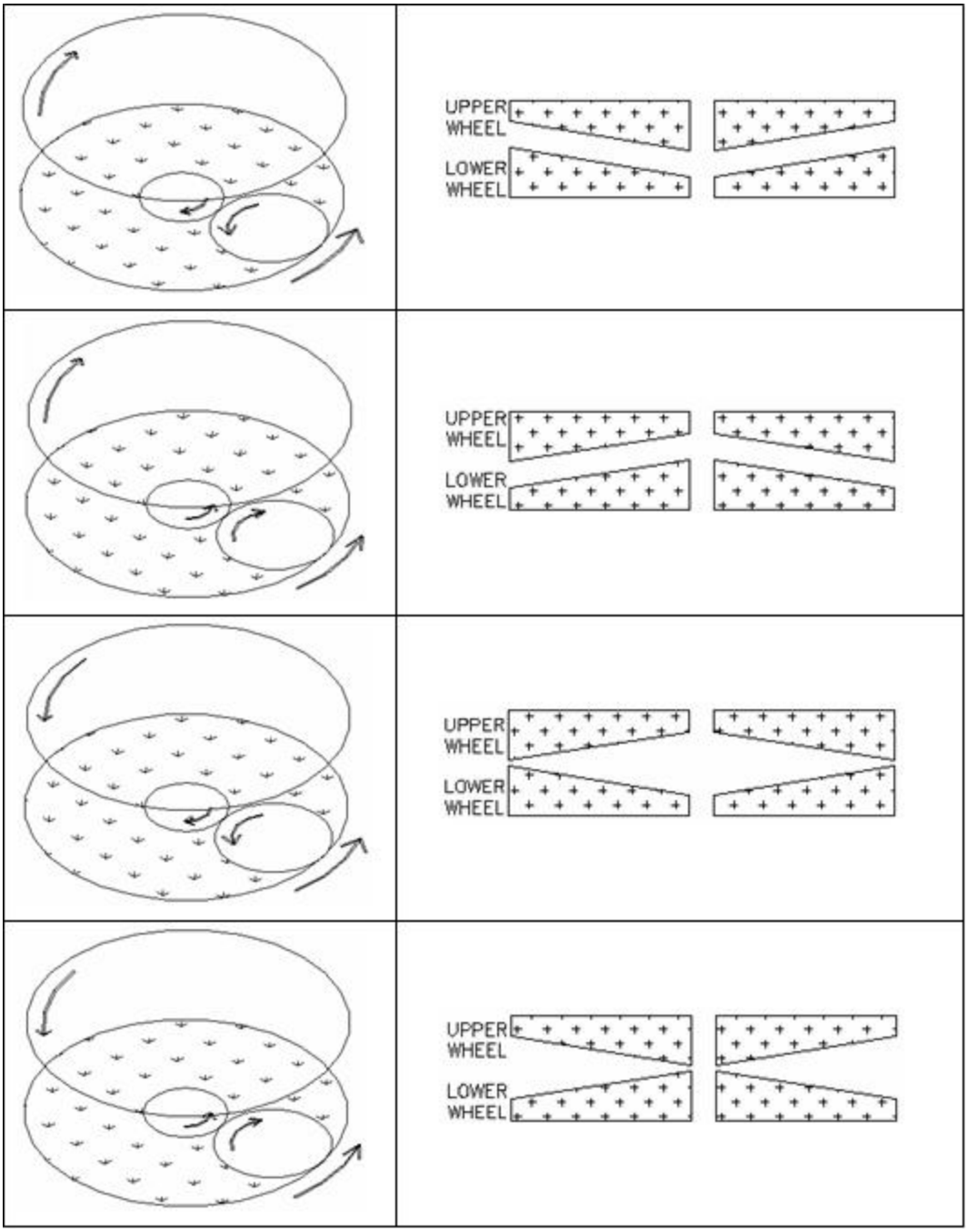

When you process in the direction shown on the left, the wear of the grinding wheel is as shown on the right. When the wear of the grinding wheel in the figure on the right exceeds ± 0.1 millimeters (the higher the flatness of the grinding wheel, the higher the quality of the workpiece), then you need to change the rotation direction of the grinding wheel or dress.

Dressing operation

The grinding wheel must be regularly inspected to ensure flatness. To achieve a standard form of flat surface, it is necessary to perform trimming operations. If the machine is equipped with dressing facility and dressing mode, then you can use this facility and mode. If not, please contact the manufacturer of this machine.

5.1.2 The following situations occur:

A. Reason

The wear rate of the lower is faster than that of the upper

Not dressing the grinding gear in a timely manner

B. Measures taken

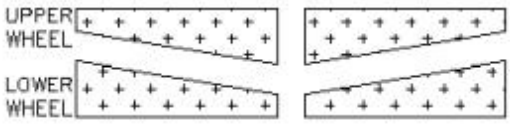

Check the direction and speed of the carrier

Reduce the speed of loading the carrier

Increase the speed of the lower

Set the speed and direction so that the relative speed of the carrier is lower than the speed of the lower.

A. Reason

The wear rate of the upper is faster than that of the lower, and the dressing of the grinding gear is not timely.

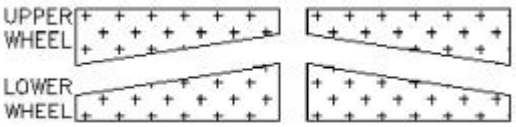

B. Measures (opposite to the first scenario)

Check the direction and speed of the carrier.

Reduce the rotational speed of the lower. Increase the rotational speed of the upper .

Set the speed and direction so that the relative speed of the carrier is

greater than the speed of the lower.

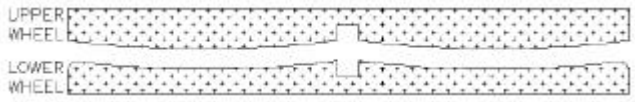

A. Reason

The wear rate in the middle of the carrier is too fast, and the wear rate in the lower is too fast.

B. Measures taken

Reduce the amount of workpieces in the middle of the carrier.

If necessary, take the same measures as in situation 1 to reduce the impact.

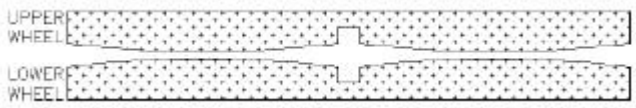

A. Reason

There is too little wear in the middle of the carrier, too many edges, and the direction of the inner gear changes too frequently.

B. Measures taken

Control the number of carriers.

5.1.3 Measurement methods

Clean and dry the lower.

Place the measuring gauge on the lower.

Push the measuring gauge as close to the inner gear as possible.

Insert a 0.05mm measuring paper between the measuring gauge and the grinding wheel disc, starting from 1 to 5 in the following figure. If the measuring pad cannot fit in, the grinding wheel does not need to be trimmed. If the flatness of the grinding wheel exceeds ±0.05mm,it is recommended to manually adjust it immediately.

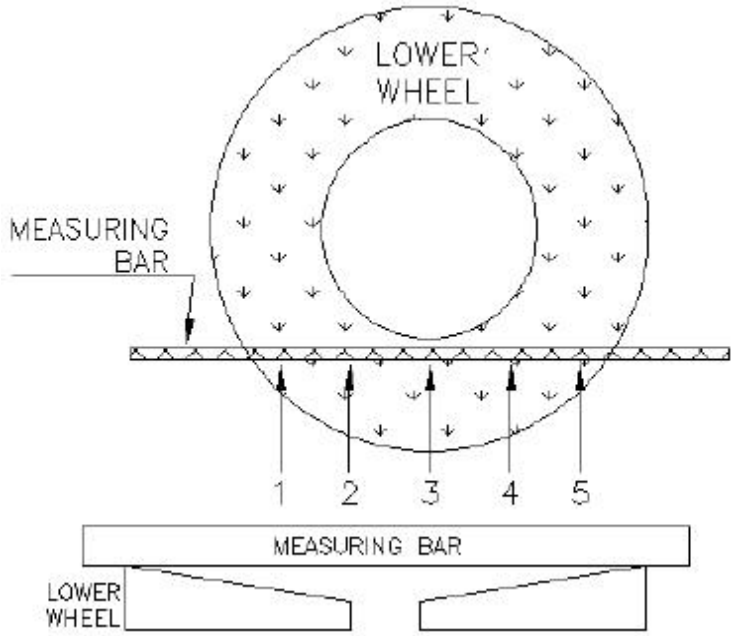

This process must be checked daily.

To obtain better processed workpieces, it is necessary to maintain the flatness of the grinding wheel as much as possible.

When repairing, it is recommended to use the manufacturer's grinding wheel!

This process requires checking the flatness of the lower daily.

Don't forget that the flatness of the grinding wheel affects the flatness of the workpiece.

Please provide sufficient coolant during the dressing operation and startup process.

5.2 grinding wheel replacement

When the CBN or diamond layer of the grinding wheel is used up, the grinding wheel must be replaced.

Please carefully read the following steps and always pay attention to safety.

▣ Grinding wheel replacement steps

1) Turn out the upper and clean the items between the upper and lower.

2) Remove the outer gear.

3) Turn in and descend the upper to the lower surface.

4) Remove the waterproof cover from the upper.

5) Reduce the buoyancy pressure of the upper, loosen and remove the fastening bolts of the upper, and raise the flange of the upper.

※ Important: When the flange of the upper rises, make sure that the upper does not rise together with the flange.

6) Turn out the flange of the upper.

※ Attention: The size measuring probe in the center of the upper should not collide with the surface of the upper substrate.

7) Use a forklift or hydraulic lift truck to remove the upper.

8) Loosen the six bolts on the edge of the lower.

9) Place two circular bolts at the edge of the lower.

10) Place the load-bearing steel wire or chain into the circular bolt and tighten it.

11) Use a hydraulic lift truck or forklift to lift the lower and place it in a spacious area.

12) After lowering the lower, remove the connecting bolts between the flange and the grinding wheel.

13) Clean the flat parts of the flange and connecting shaft.

14) Apply a small amount of lubricating grease to the lower connecting shaft.

15) Reinstall the flange and new diamond grinding wheel.

16) Use a hydraulic lift truck or forklift to place the lower grinding wheel

as a whole onto the lower spindle connection part.

17) Use a torque wrench to tighten the bolt clockwise (M=50Nm).

18) Use a hydraulic lift truck or forklift to place the upper grinding wheel as a whole on the surface of the lower.

19) Turn in the flange of upper and land.

※ Attention: Do not collide the size controller probe with the surface of the grinding wheel to cause damage.

20) Use a torque wrench to tighten the upper bolts diagonally (M=40Nm) in sequence

21) Install the outer gear.

22) Install the upper protective cover.

5.3 Consume

After purchasing a new grinding wheel and replacing it, please check the flatness as follows.

Firstly, rotate the upper and then select manual mode.

Place the measuring gauge on the edge of the lower.

Set the lower speed to 10RPM and run the lower.

See changes in the measurement table.

We suggest this change, which requires a flatness of ± 0.01 millimeters.

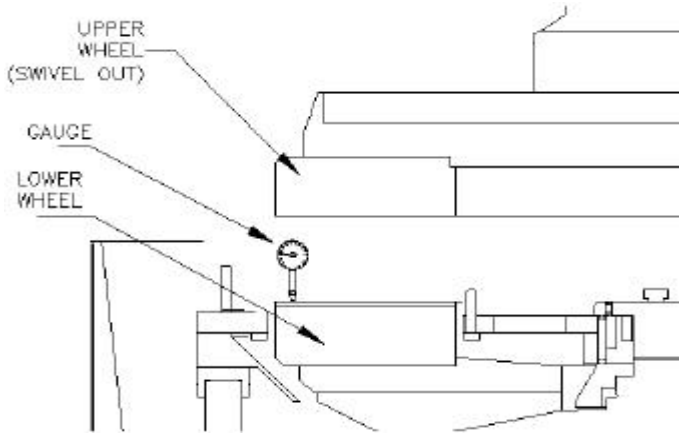

It may also be due to impurities between the lower and the measuring gauge causing this value to exceed ± 0.01 mm, or the accuracy of the grinding wheel itself may not meet the requirements. In this case, the flatness can be adjusted by dressing the grinding wheel.

Chapter 6 Maintenance

6.1 General Notes
6.2 Gear Oil Replacement
6.3 Grease and Injection Point
6.4 Pneumatic Component Maintenance
6.5 Equipment Cleaning
6.6 Height Adjustment of Measurement Probe
6.7 Probe Setting
6.8 Semi-Automatic Loading/Unloading Function
6.9 Connection of Auxiliary Components

6.1 General Notes

Regular maintenance is essential to maintain the equipment in good condition.
However, maintenance work involves inherent risks.
Exercise extreme caution during maintenance procedures.
Key Priority:
"Safety and accident prevention."
You should read these items frequently and pay attention to observation in your daily life.

6.1.1 Equipment Transportation

Handle equipment loading/unloading with care and follow operational protocols.

Observe directional and warning labels on packaging!

Warning: Never stand or walk under a load-bearing arm.

Refer to the preface chapter for details.

6.1.2 Pre-Operation and Operational Precautions

Ensure the main power supply voltage matches the equipment's rated voltage before connecting circuits.

The main power line does not include a dedicated fuse. Install an appropriatefuse box beforehand.

Use an ammeter to verify current direction after circuit connection.

Grinding wheel rotation:

Upper : Clockwise

Lower : Counterclockwise

Regularly inspect electrical connections and ensure terminals are secure.

Confirm the upper is loosened and in floating state before starting processing.

Activate the equipment only after all safety devices (e.g., safety doors, covers, enclosures) are properly secured.

Grinding wheel edges are extremely sharp. Exercise extreme caution when loading/unloading workpieces.

6.1.3 Maintenance Precautions

The equipment's maintenance schedule and maintenance procedures should be strictly followed in accordance with the guidelines provided in the

operating manual.

Maintenance must be performed by authorized personnel, Maintenance should be carried out by a dedicated person, and there should be more than one person.

6.1.4 Electrical Component Maintenance

Turn off the main power switch (S/W) before starting work.

Close switches for pipeline system instruments.

Release compressed air from pneumatic lines.

Drain residual liquid from coolant pipes.

Replace damaged pipelines immediately.

Tighten connections under no pressure state.

Ensure flexible hoses between machines and components are naturally bent to avoid damage.

Use appropriate tools for maintenance tasks.

Replace defective parts promptly and label replaced components.

Document all existing markings when removing covers, hinge covers, plugs, etc.

Clean assembly surfaces before reassembly.

Regularly update screws, nuts, spring washers, and washers to ensure optimal performance.

Apply suitable lubricants/sealants to connections.

Thoroughly clean components before lubrication.

Use only specified or recommended oils/lubricants during replacement.

Warning: Follow safety protocols when handling cleaning materials and solvents, such as viscous substances or grease.

Clean grinding residue regularly to prevent hardening. Avoid spraying cleaners directly above the central drive unit.

Keep floors around the machine clean and dry.

When removing lubricants, it is necessary to follow environmental regulations by using cleaning agents, solvents, oils, and other solutions.

Post a visible warning sign on the power switch when the electrical system is active.

Check for residual voltage in work areas and components before resuming

work

after power-off.

During inspection, measuring tools must be used and inspected prior to use.

Do not unplug devices while powered.

Use flexible cables for instrument connections; avoid over-tightening.

Store tools in designated cases to prevent contamination.

Use anti-static devices (e.g., conductive flooring, grounded surfaces, wrist straps, static-safe clothing) when handling electrical components.

Use the same type of battery, and when removing the battery, please do not litter to avoid polluting the environment.

Store plastic components in dry, cool environments. Avoid sealed packaging for over 6 months.

6.1.5 Post-Maintenance Checklist

After completing maintenance:

Reinstall all safety guards and protective devices.

Verify machine functionality, electrical systems, and auxiliary components.

Refer to specific instructions in relevant chapters for additional checks.

Review appendices for auxiliary instrument/equipment guidelines.

6.2 Gearbox Oil Replacement

The gear oil must be replaced every 2 years in strict accordance with the "technical specifications" provided by the gearbox manufacturer.

6.2.1 Motor-Driven Worm Gear Reducer

The worm gear reducer (upper, lower, and inner gear) is pre-lubricated with SHELL OMALA OIL 680 at the factory. Replace the gear oil every 2 years. If the equipment operates in extremely cold environments, use an alternative oil type: SHELL OMALA OIL 460.

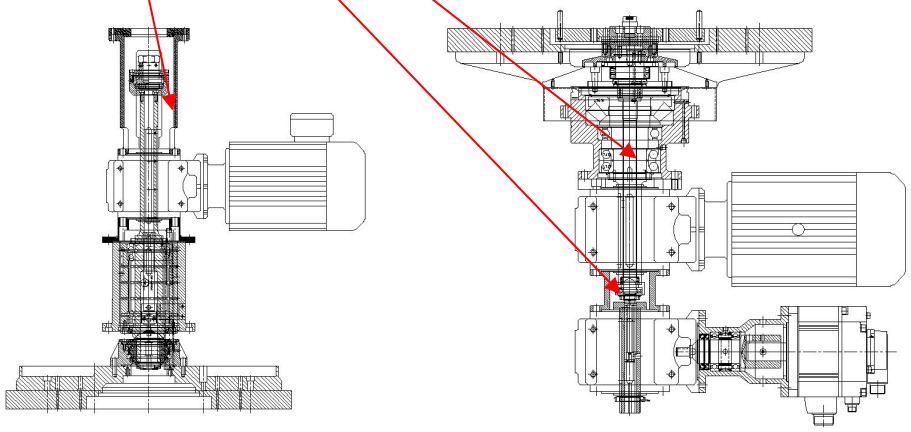

Conduct regular inspections to check for gear oil loss and deterioration.

If gear oil loss is confirmed, loosen the inspection bolt at the bottom of the gearbox to inspect the remaining oil level.

The gear oil level must reach the bottom of the inspection port.

Gearbox capacity: 2.6 liters per unit.

The equipment uses S67 series motors.

Helical-worm (S) gear units

S..:

Gear unit type	Fill quantity in liters					
	M1	M2	M3[1]	M4	M5	M6
S37	0.25	0.40	0.50	0.55	0.40	0.40
S47	0.35	0.80	0.70/0.90	1.00	0.80	0.80
S57	0.50	1.20	1.00/1.20	1.45	1.30	1.30
S67	1.00	2.0	2.2/3.1	3.1	2.6	2.6
S77	1.90	4.2	3.7/5.4	5.9	4.4	4.4
S87	3.3	8.1	6.9/10.4	12.0	8.4	8.4
S97	6.8	15.0	13.4/18.0	22.5	17.0	17.0

1) The large gear unit of multi-stage gear units must be filled with the larger oil volume.

※Consult the SEW drive lubrication chart. Select the appropriate oil type from the chart on the next page.

6.2.2 Please refer to the photocopy of the motor user manual (see next page) for details on gear oil lubrication.

6 Design and Operating Notes

6.1 Lubricants

General information

Unless a special arrangement is made, SEW-EURODRIVE supplies the drives with a lubricant fill specifically for the gear unit and mounting position. The decisive factor is the mounting position (M1...M6, → Sec. 'Mounting Positions and Important Order Information') specified when ordering the drive. You must adapt the lubricant fill to any subsequent changes made to the mounting position (→ Lubricant fill quantities).

Lubricant table

The lubricant table on the following page shows the permitted lubricants for SEW-EURODRIVE gear units. Please note the following key to the lubricant table.

Key to the lubricant table

Abbreviations used, meaning of shading and notes:

CLP	= Mineral oil
CLP PG	= Polyglycol (W gear units, conforms to USDA-H1)
CLP HC	= Synthetic hydrocarbons
E	= Ester oil (water pollution danger category WGK 1)
HCE	= Synthetic hydrocarbons + ester oil (USDA - H1 certification)
HLP	= Hydraulic oil
	= Synthetic lubricant (= synthetic-based anti-friction bearing grease)
	= Mineral lubricant (= mineral-based anti-friction bearing grease)
1)	Helical-worm gear units with PG oil: Please contact SEW-EURODRIVE
2)	Special lubricant for Spiroplan® gear units only
3)	Recommendation: Select SEW $f_B \geq 1.2$
4)	Note critical starting behavior at low temperatures!
5)	Low-viscosity grease
6)	Ambient temperature
	Lubricant for the foodstuffs industry (food industry oil)
	Biodegradable oil (lubricant for use in agriculture, forestry and water resources)

Anti-friction bearing greases

The anti-friction bearings in gear units and motors are given a factory-fill with the greases listed below. SEW-EURODRIVE recommends regreasing anti-friction bearings with a grease fill at the same time as changing the oil.

	Ambient temperature	Manufacturer	Type
Anti-friction bearing in gear unit	-30 °C...+60 °C	Mobil	Mobilux EP 2
	-40 °C...+80 °C	Mobil	Mobiltemp SHC 100
Anti-friction bearing in motor	-25 °C...+60 °C	Esso	Unirex N3
	-25 °C...+60 °C	Shell	Alvania R3
	+80 °C...+100 °C	Klüber	Barrierta L55/2
	-45 °C...-25 °C	Shell	Aero Shell Grease 16
Special greases for anti-friction bearings in gear units:			
	-30 °C...+40 °C	Aral	Aral Eural Grease EP 2
	-20 °C...+40 °C	Klüber	Klüberbio M32-82

The following grease quantities are required:

- For fast-running bearings (motor and gear unit input end): Fill the cavities between the roll barrels one third full with grease.
- For slow-running bearings (in gear units and gear unit output end): Fill the cavities between the roll barrels two thirds full with grease.

Lubricant table

01 805 892

	6) °C -50 0 +50 +100	DIN (ISO)	ISO,NLGI	Mobil®	Shell	KLÜBER LUBRICATION	ARAL	bp	Tribol	TEXACO	Optimol	FUCHS
R...	Standard -10 +40	CLP(CC)	VG 220	Mobilgear 630	Shell Omala 220	Klüberoil GEM 1-220	Aral Degol BG 220	BP Energol GR-XP 220	Tribol 1100/220	Meropa 220	Optigear BM 220	Renolin CLP 220
K...(HK...)	-25 +80	CLP PG	VG 220	Mobil Glygoyle 30	Shell Tivela S 220	Klübersynth GH 6-220	Aral Degol GS 220	BP Enersyn SG-XP 220	Tribol 800/220	Synlube CLP 220	Optiflex A 220	
	4) -40 +80	CLP HC	VG 220	Mobil SHC 630	Shell Omala HD 220	Klübersynth EG 4-220	Aral Degol PAS 220		Tribol 1510/220	Pinnacle EP 220	Optigear Synthetic A 220	Renolin Unisyn CLP 220
	4) -40 +40		VG 150	Mobil SHC 629	Shell Omala HD 150	Klübersynth EG 4-150				Pinnacle EP 150		
F...	-20 +25	CLP (CC)	VG 150 VG 100	Mobilgear 627	Shell Omala 100	Klüberoil GEM 1-150	Aral Degol BG 100	BP Energol GR-XP 100	Tribol 1100/100	Meropa 150	Optigear BM 100	Renolin CLP 150
	-30 +10	HLP (HM)	VG 68-46 VG 32	Mobil D.T.E. 13M	Shell Tellus T 32	Klüberoil GEM 1-68	Aral Degol BG 46		Tribol 1100/68	Rando EP Ashless 46	Optigear 32	Renolin B 46 HVI
	4) -40 +10	CLP HC	VG 32	Mobil SHC 624		Klüber-Summit HySyn FG-32				Cetus PAO 46		
	4) -40 -20	HLP (HM)	VG 22 VG 15	Mobil D.T.E. 11M	Shell Tellus T 15	Isoflex MT 30 ROT		BP Energol HLP-HM 15		Rando HDZ 15		
S...(HS...)	Standard 0 +40	CLP (CC)	VG 680	Mobilgear 636	Shell Omala 680	Klüberoil GEM 1-680	Aral Degol BG 680	BP Energol GR-XP 680	Tribol 1100/680	Meropa 680	Optigear BM 680	Renolin CLP 680
	-20 +60	CLP PG	VG 680 1)		Shell Tivela S 680	Klübersynth GH 6-680		BP Enersyn SG-XP 680	Tribol 800/680	Synlube CLP 680		
	4) -30 +80	CLP HC	VG 460	Mobil SHC 634	Shell Omala HD 460	Klübersynth EG 4-460				Pinnacle EP 460		
	4) -40 +10		VG 150	Mobil SHC 629	Shell Omala HD 150	Klübersynth EG 4-150				Pinnacle EP 150		
	-20 +10	CLP (CC)	VG 150 VG 100	Mobilgear 627	Shell Omala 100	Klüberoil GEM 1-150	Aral Degol BG 100	BP Energol GR-XP 100	Tribol 1100/100	Meropa 100	Optigear BM 100	Renolin CLP 150
	-25 +20	CLP PG	VG 220 1)	Mobil Glygoyle 30	Shell Tivela S 220	Klübersynth GH 6-220			Tribol 800/220	Synlube CLP 220	Optiflex A 220	
	4) -40 0	CLP HC	VG 32	Mobil SHC 624		Klüber-Summit HySyn FG-32				Cetus PAO 46		
R...K...(HK...), F...,S...(HS...)	4) -30 +40	HCE	VG 460		Shell Cassida Fluid GL 460	Klüberoil 4UH1-460 N	Aral Eural Gear 460				Optileb GT 460	
	-20 +40	E	VG 460			Klüberbio CA2-460	Aral Degol BAB 460				Optisynt BS 460	
W...(HW...)	Standard -20 +40	SEW PG	VG 460 2)			Klüber SEW HT-460-5						
	4) -40 +10	API GL5	SAE 75W90 (~VG 100)	Mobilube SHC 75 W90-LS								
	-20 +40	CLP PG	VG 460 3)			Klübersynth UH1 6-460						
R32 R302	-25 +60	DIN 51 818	00	Glygoyle Grease 00	Shell Tivela GL 00	Klübersynth GE 46-1200				Multifak 6833 EP 00		
	Standard -15 +40	5)	000 - 0	Mobilux EP 004	Shell Alvania GL 00		Aralub MFL 00	BP Energrease LS-EP 00		Multifak EP 000	Longtime PD 00	Renolin SF 7 - 041

6.3 Grease and Injection Point

Regular maintenance of this procedure is essential to ensure equipment longevity.

Apply 5 pumps of grease to each lubrication point using a grease gun every 6 months.

★ Lubrication port locations are shown in the diagram below.

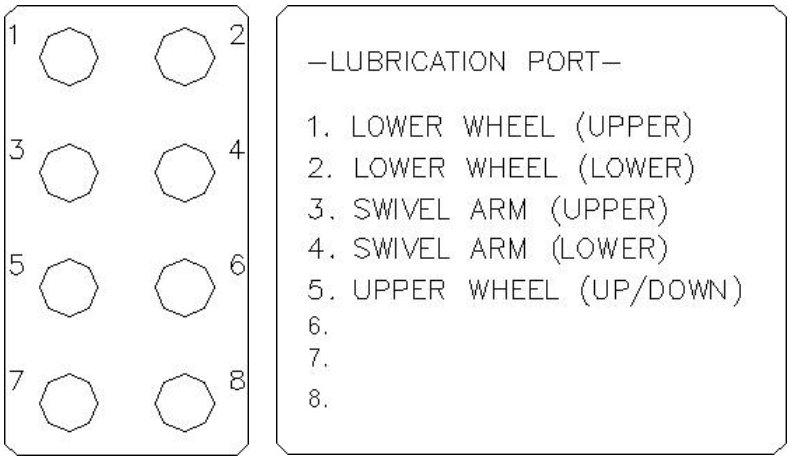

6.4 Pneumatic Component Maintenance

The compressed air supplied directly by the compressor contains moisture and contaminants, which can negatively impact equipment performance.

The filter performs the final inspection and filtration of air before it reaches the equipment.

Regular inspections are required to remove accumulated moisture and clean foreign particles.

If moisture is detected:

Drain the collected liquid from filter [E-5] via Valve [E-6].

Simply press Button [E-7] to activate drainage.

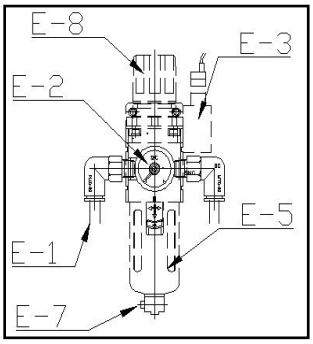

or

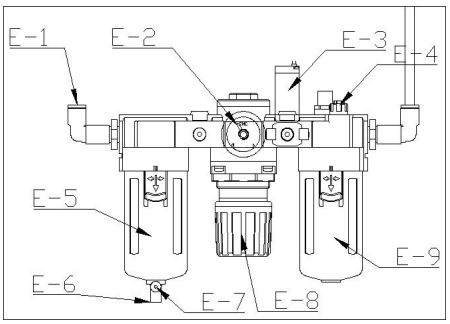

E-1. Compressed Air Inlet

E-2. Compressed Air Pressure Gauge

E-3. Pressure Sensor

The equipment stops all motion if the air pressure supplied to this sensor falls below the set value.

※ Factory setting for Pressure Sensor E-3: 0.4 [MPa] (4 kg/㎠).

E-4. Oil Capacity Control via [E-9]

E-5. Liquid Collection in Filter

E-6. Liquid Drainage Port

E-7. Drain Button

Use this button to drain accumulated liquid from the filter.

E-8. Air Supply Capacity Control

Factory setting for pressure regulator: 0.6 [MPa] (6 kg/㎠).

E-9. Oil Reservoir

6.5 Equipment Cleaning

Clean the equipment and surrounding floor daily.

Remove grinding powder from the holes in the upper daily.

Avoid spraying water directly onto components such as:

lower bearings,Bearings of the outer gear support structure.

Do not rinse the central shaft or upper cover. Wipe these areas with a cloth instead.

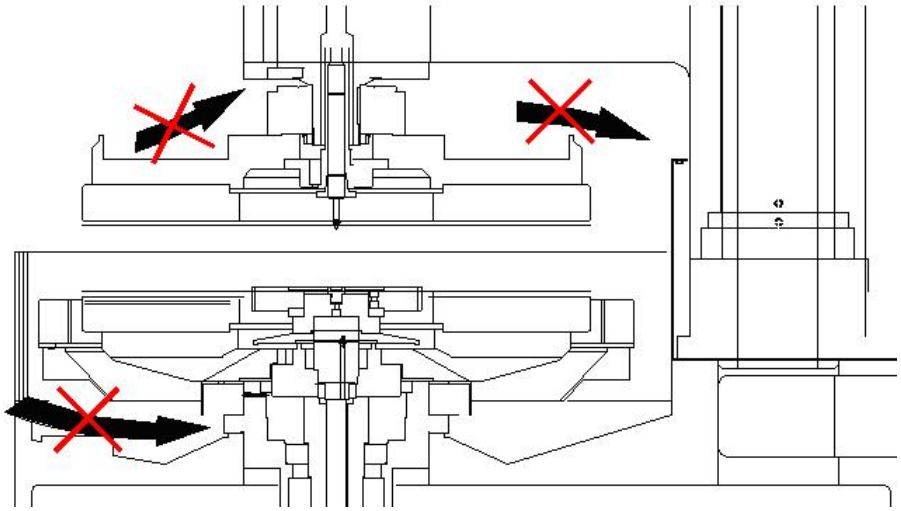

Special attention is required to inspect the area indicated by the arrow, as residue and other debris tend to accumulate there.

6.6 Height Adjustment of Measurement Probes

6.6.1 Guideline

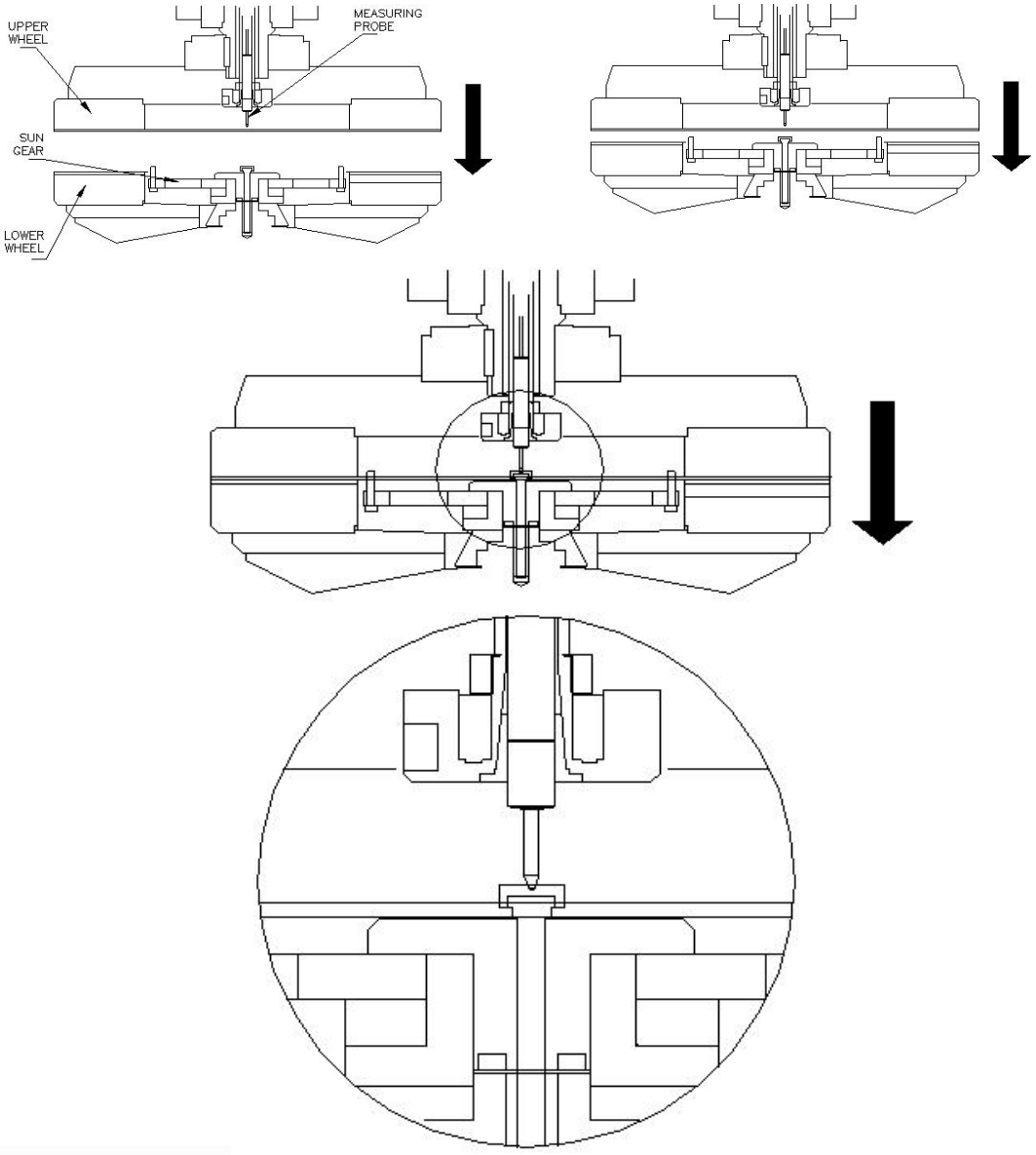

In Figure 3, the measurement probe is aligned with the bottom surface. Figure 4 provides a clearer illustration.

If the probe does not make contact,Lower the probe position until contact is achieved.

If excessive contact occurs (controller displays a value exceeding 25 mm),Raise the probe position until the controller shows an appropriate

value (5 - 15 mm).

6.7 Probe Setting

The shape/configuration of the measurement probe is shown below.

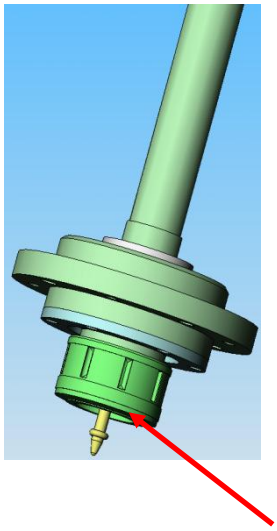

This component can be manually rotated to move up and down

The probe tip and reference surface are made of carbide (high-hardness alloy). Frequent use causes wear on the probe tip and reference surface. These two parts need to be checked every month, and the top of the precision grinding benchmark surface. Please note that the bottom of the detection head cannot be worn flat. If it is severely worn, please replace it.

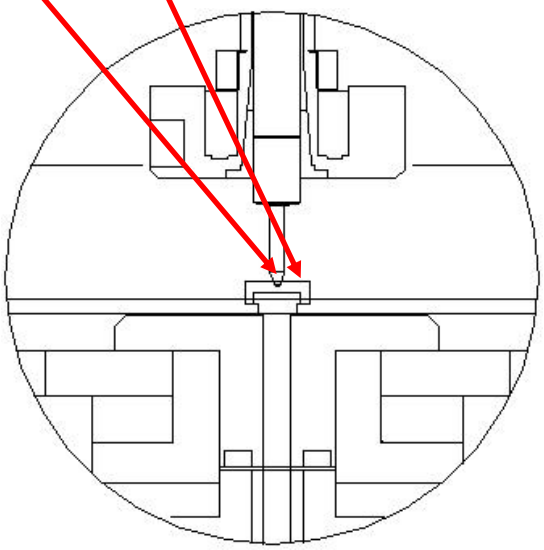

6.8 Semi-Automatic Loading/Unloading Function

6.8.1 Loading Process

If a loading table and semi-automatic loading/unloading function are available, select [Semi-Automatic] to enable this feature in time mode, thickness mode, or manual mode.

Assuming operation in thickness mode:

1. Enter the settings interface to enable the function.
2. Check the number of carriers. Adjust this value as needed (assume that 5 carriers for this example).
3. Switch to thickness mode.
4. Rotate out the upper.
5. Lower the outer gear loading section.
6. Place the carriers as shown in the following figure.

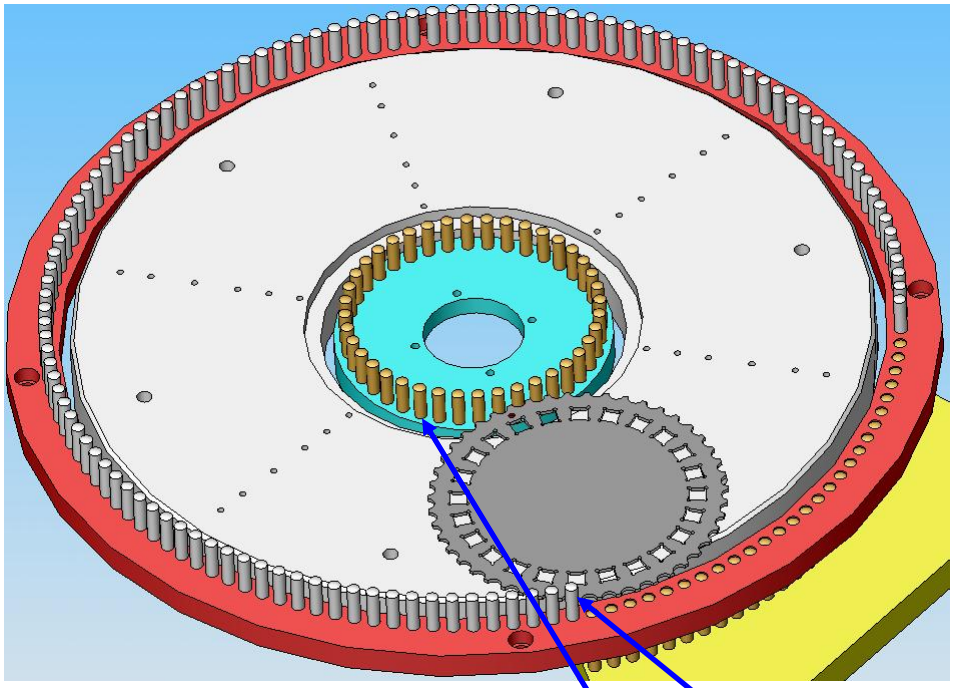

Attention: For safe placement of the carrier, push the carrier into the left side until it cannot move. Then the carrier and the teeth of inner gear must be interlocked, and the teeth near the outer gear must be interlocked with the first tooth of the part for fixing the outer gear.

7.On the control panel, press the [Next Step] button.The first loaded carrier carries will automatically rotate 72 degrees to the position shown below (illustrated in Figure 7.1).

This rotated position is where the second carrier carries should be placed.

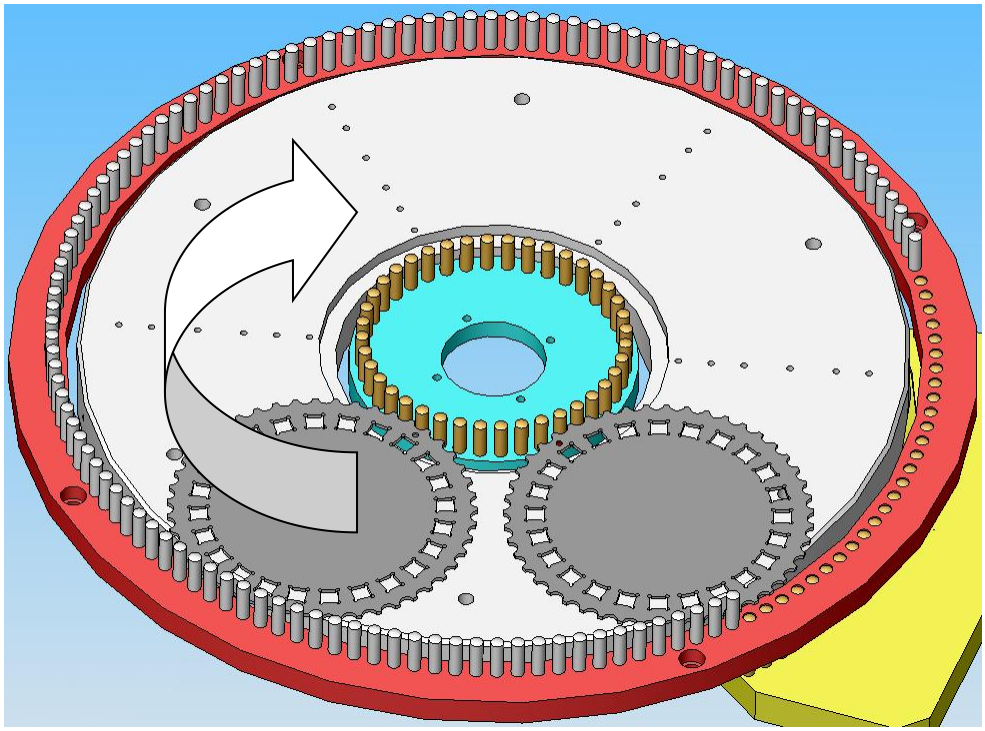

1st Carrier 2nd Carrier

8. After placing the second carrier as shown in the above figure, press the [Inner Gear Rotation] button. The first and second carriers will rotate 72 degrees simultaneously. Prepare to place the third carrier.

9.Repeat the process to sequentially load all five carries.

10.After placing the fifth carrier, do not press the [Inner Gear Rotation] button.Visually verify that all carriers are properly aligned and seated.

11. After placing all the carriers, as shown in the following figure.

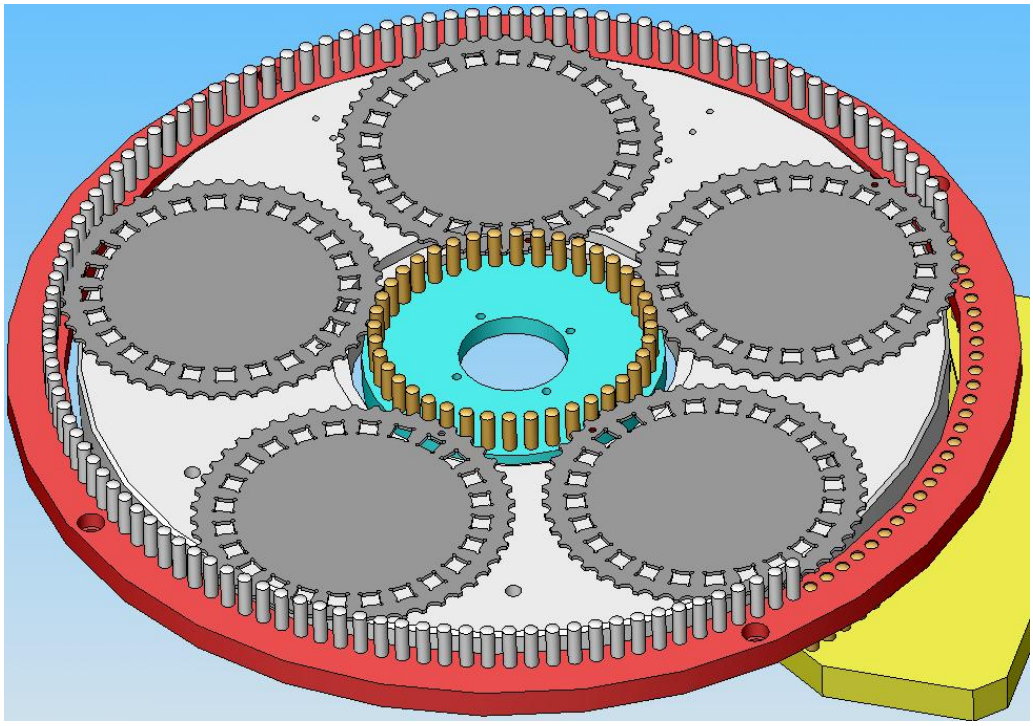

10. All carriers are in place, raise the outer gear.

11. Press the [Start] button to initiate the grinding process.

6.8.2 Unloading Process

After grinding is complete, the carrier carries is not in the designated unloading position.

To resolve this:Rotate the carries to the unloading position.

Press the [inner gear Rotation] button. The inner gear will rotate slowly.

1.Use the [inner gear Rotation] button to move the carries to the position shown below.

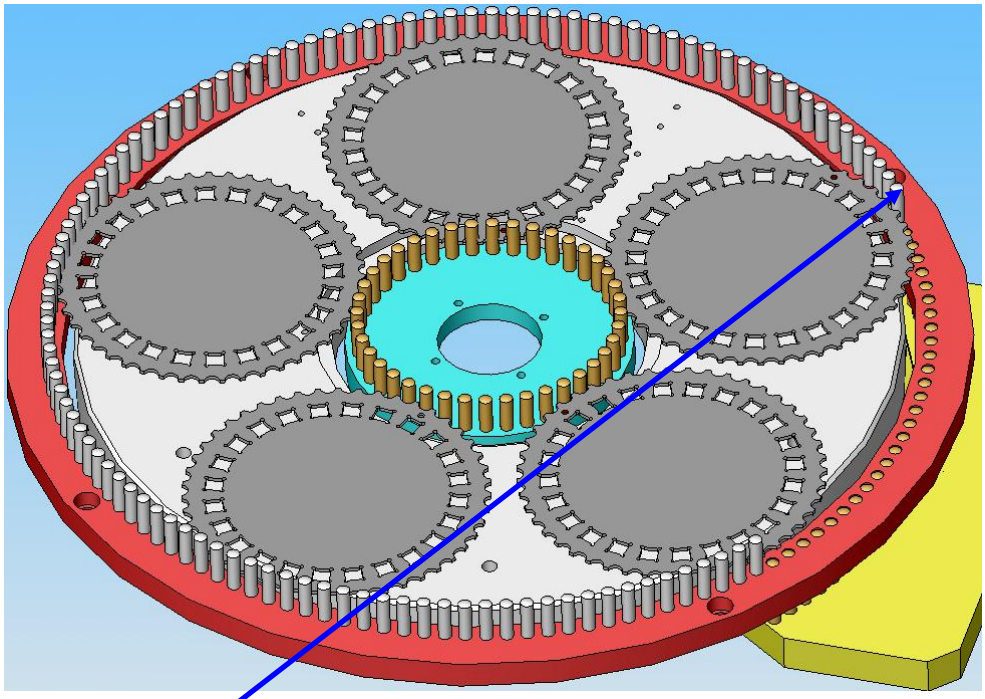

★ Attention: At this point, it is important to note the position of the first carrier to be removed

Move the carrier as shown in the figure above, and the teeth of the first carrier must be located on the outermost tooth of the part for fixing the outer gear. If you stop the first carrier position too far from the fixed outer gear's first tooth, the second carrier is likely to collide with the first carrier.

2. Move the first carrier.

3. Then, press the [inner gear Rotation] button. Then the second carrier arrives at the unloading position. As the following figure.

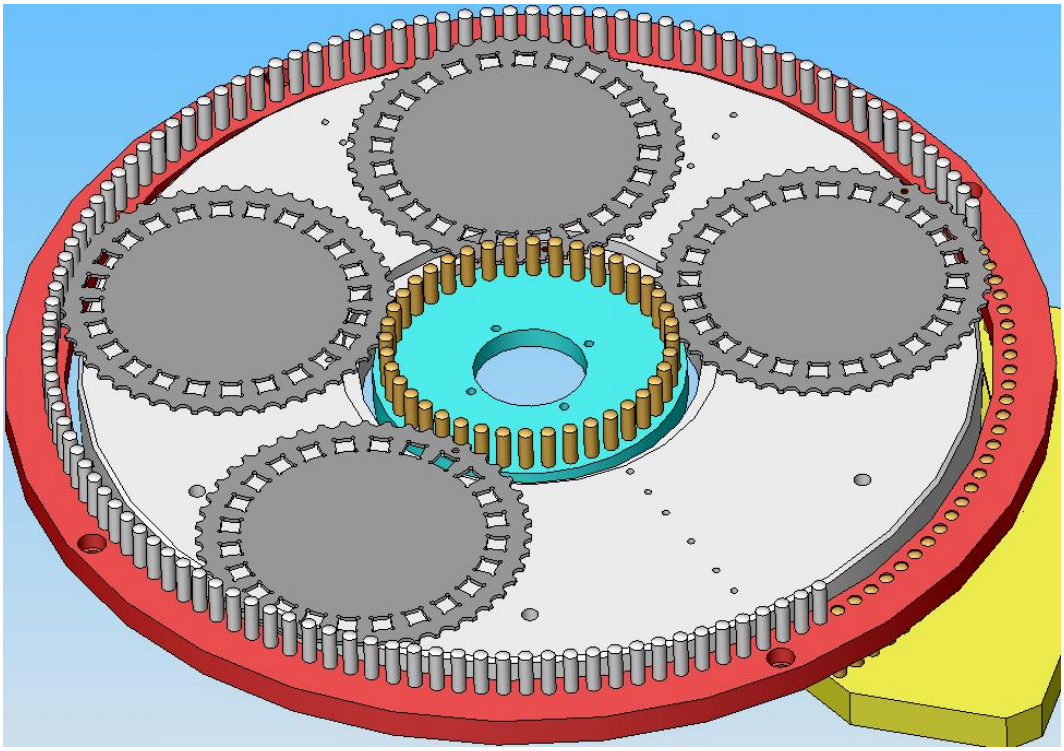

4. After removing the second carrier, press the [Inner Gear Rotation] button again.

5. Remove all carriers using the same procedure as described above.

6. After all carriers are removed, reload the carrier carriess using the same loading procedure (refer to Section 6.8.1).

7. Press the [Start] button to begin machining.

6.9 Connection of Auxiliary Components

6.9.1 Equipment Layout Diagram

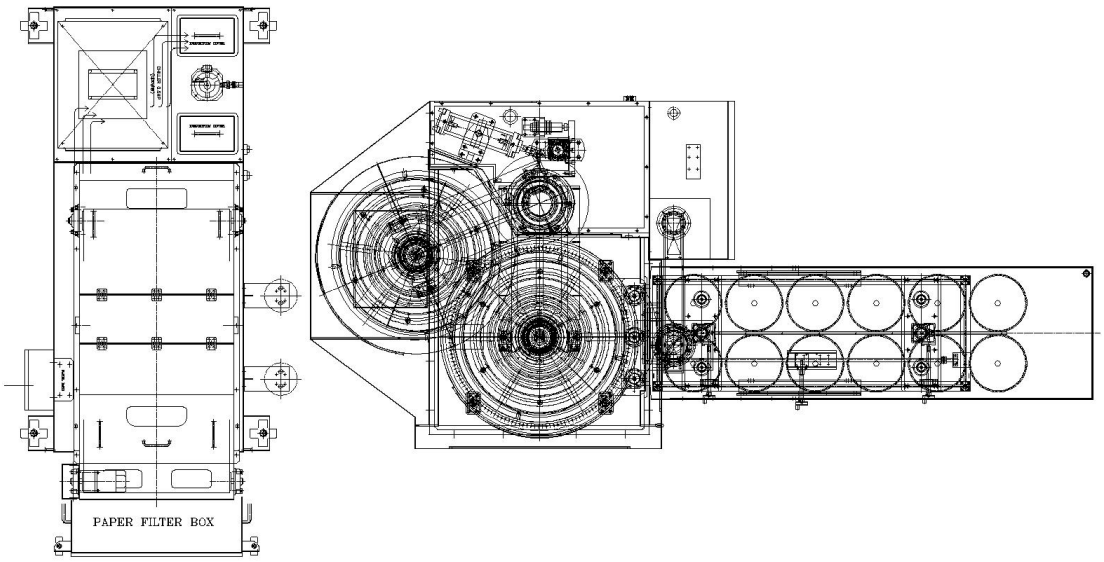

6.9.2 Power Supply Line Connector

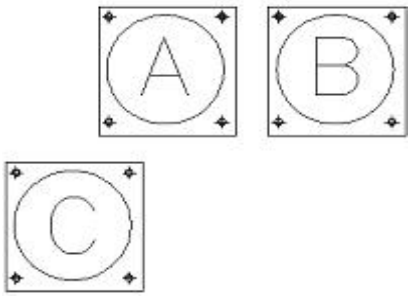

A - 4P - Coolant pump

B - 4P - Paper tape filtration system & Centrifugal separator

C - 5P -Condenser

D - Spare parts

E - Spare parts

※6.9.3 Auxiliary Functions

Various practical functions can be added to the machine based on specific needs. The selection and installation of features depend on user requirements, safety considerations, and site conditions. For detailed information, refer to the machine“s serial number and contact the

manufacturer.

✓ Chiller Unit

Maintains a constant temperature of cutting water. The chiller circulates cutting fluid to stabilize temperatures for the grinding wheel and spindle.

✓ Centrifugal Separator

Filters impurities from cutting fluid after machining.

✓ Paper Filter

Removes large amounts of sludge from cutting fluid via filtration before discharge.

✓ Magnetic Separator

Simplifies removal of metal sludge using magnetic force.

※Machine operation steps

Thank you for using our ADG series equipment!

Please make the correct choice according to the following steps, as different choices may have different special applications.

Read through this operating procedure and familiarize yourself with the correct operating methods. Unreasonable operations may lead to shortened lifespan and failure.

In most cases, if you follow this manual, you can process normally. But sometimes it may be necessary to change the operating steps according to different processing conditions. Please flexibly apply the content of this document to adapt to your work.

- **Before the program starts**

Please check the following items. If there are any problems, you need to solve them before starting.

1. Check the usage of each grinding wheel.

2. Check for any leaks in the grinding fluid system or cooling water hoses.

3. Check if the temperature setting of the condenser is correct.

4. Check if the supply of compressed air is normal.

5. Check if the power connections (cooling pump power supply, filter power supply) are correct.

6. Check if there is enough coolant in the water tank. If there is a grinding liquid tank, check if the mixer can operate normally.

7. Check and clean the centrifugal separator. Before cleaning the inner bucket of the centrifuge, you must confirm that the power supply of the centrifuge is turned off and the inner bucket is not rotating. You can only open the lid after the inner bucket stops rotating.

The beginning of the program

When you turn on the machine power, please wait for at least 15 seconds as this is the PLC loading time, which may vary depending on the device.

1. Remove debris between the upper and lower.

2. Choose between manual mode or maintenance mode.

3. Check if each axis and module can work properly.

4. Check if the settings of each parameter are correct. (such as rotation direction, delay time, processing time, rotation speed of each axis, etc.)

5. If you choose the thickness mode, please refer to the next section. If you choose the time mode, check the time settings of each processing process and change the set time if necessary

When dressing the grinding gear, please do not use excessive pressure to prevent rapid wear or damage of the grinding gear.

- **Loading workpieces**

1. Switch between time mode or thickness mode.

2. Ascend to the upper and then turn out.

3. Load the carrier and workpieces.

4. The button [loading and unloading] can make it more convenient for you to load workpieces.

- **Start the program**

During this process, if the machine has abnormal vibration or noise, please press the emergency switch to stop the machine. And check the working status of the equipment (speed, rotation direction, adjustment of the upper and lower , delay time). If you are unable to find a solution, please contact us promptly.

1. Press the [Start] button to lower the upper.

2. Then the coolant is automatically supplied and automatic grinding has begun.

3.After the processing is completed, the upper will rise after the delay time ends.

4. Check if the workpiece has reached the target size.

5. Then unload all workpieces.

6. Reload new workpieces.

7. Check the loading condition of the workpiece. (Whether they in the appropriate position).

8. Press the start button

9. Similarly, after processing is completed, check the size again.

10. If any compensation data is needed, please change the settings and start a new cycle again.

- **After processing is completed**

When cleaning the machine, please be careful not to splash water on the outside and electrical parts.

1. Rise and exit the upper.

2. Please clean the machine body and also clean the carrier.

3. Transfer and decline to the upper.

4. Turn off the device power.

If you have any questions, please contact us and consult us!